Mitutoyo

Catalog No. US-1002

Measuring Instruments Catalog

FOR MORE INFORMATION PLEASE VISIT OUR WEBSITE

www.kvsengineer.com

(click the link to direct to the site)

02-214-0101

Mitutoyo

ABSOLUTE Digimatic Indicator ID-S

SERIES 543 — with Economical Design

SPC

ABSOLUTE
Absolute System Patented by MITUTOYO

FEATURES

- As compact as standard Series 2 dial indicators.
- The ID-S indicates the absolute position of the spindle from the origin point at power-on, allowing to start measurements.
- After the initial zero-setting with the ORIGIN button, the repeated absolute positioning is no longer necessary over the entire battery life.
- Measurement error due to spindle over-speed is eliminated with the ABSOLUTE Encoder.
- SPC data output.

543-690

IP42

SPECIFICATIONS

Metric

Resolution	Order No. (w/ lug, flat-back)		Range	Accuracy	Measuring force	Remarks
0.001mm	543-690	543-690B	12.7mm	0.003mm	2.0N or less	—
0.001mm	543-694	543-694B	12.7mm	0.003mm	2.5N or less	Dust-proof
0.01mm	543-681	543-681B	12.7mm	0.02mm	2.0N or less	—

Inch/Metric

Resolution	Order No. (w/ lug, flat-back)		Range	Accuracy	Measuring force	Remarks
.00005”/0.001mm	543-691	543-691B	.5”	.00012”	2.0N or less	—
.00005”/0.001mm	543-695	543-695B	.5”	.00012”	2.5N or less	Dust-proof
.0005”/0.01mm	543-682	543-682B	.5”	.0008”	2.0N or less	—

DIMENSION

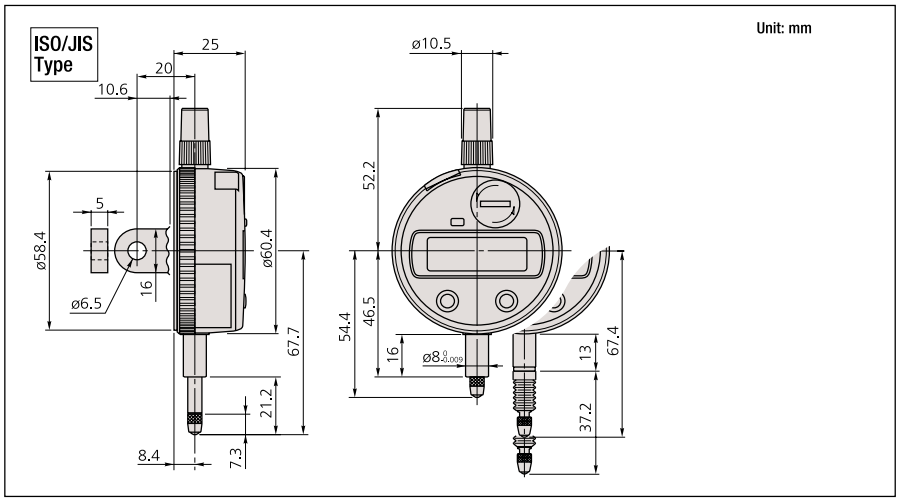

Technical Data

Accuracy: Refer to the list of specifications (excluding quantizing error)
Resolution: 0.01mm, 0.001mm, .0005"/0.01mm, or .00005”/0.001mm
Display: LCD
Length standard: ABSOLUTE electrostatic capacitance type linear encoder
Max. response speed: Unlimited
Measuring force: Refer to the list of specifications
Stem dia.: 8mm (ISO/JIS type)
Contact point: Carbide ball with M2.5x0.45 (ISO/JIS type)
Battery: SR44 (1 pc.), 938882
Battery life: Approx. 20,000 hours under normal use
Dust/Water protection level: IP42 (IP53: 543-694, 543-695, 543-696)

Function

Origin-set, Zeroset, Counting direction switching, Power ON/OFF, Data output, inch/mm conversion (inch/mm models)
Alarm: Low voltage, Counting value composition error, Over-flow error

Optional Accessory

905338: SPC cable (1m)
905409: SPC cable (2m)
903424: Spindle lifting lever (ISO/JIS type)
540774: Spindle lifting cable
125317: Spare rubber boot (for dust-proof type)
02ACB610: Back with post
02ACB630: Adjustable back
02ACB640: Back with offset lug
02ACB650: Magnetic back
02ACB670: Back with screw mount
02ACB680: Back with adjustable bracket

ABSOLUTE Digimatic Indicator ID-U

SERIES 575 — with Slime and Economical Design

SPC

ABSOLUTE®
Absolute System Patented by MITUTOYO

Technical Data

Accuracy: Refer to the list of specifications (excluding quantizing error)
Resolution: 0.01mm or .0005"/0.01mm,
Display: LCD
Length standard: ABSOLUTE electrostatic capacitance type linear encoder
Max. response speed: Unlimited
Measuring force: Refer to the list of specifications
Stem dia.: 8mm (ISO/JIS type)
Contact point: Carbide ball with M2.5x0.45 (ISO/JIS type)
Battery: SR44 (1 pc.), 938882
Battery life: Approx. 20,000 hours under normal use
Dust/Water protection level: IP42

Function

Origin-set, Zeroset, Counting direction switching, Power ON/OFF, Data output, inch/mm conversion (inch/mm models)
Alarm: Low voltage, Counting value composition error, Over-flow error

Optional Accessory

905338: SPC cable (1m)
905409: SPC cable (2m)
540774: Spindle lifting cable (stroke: 10mm)

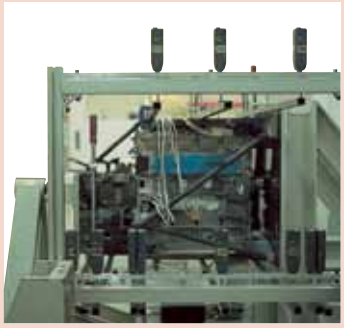

Application example

FEATURES

- Slim type digital indicator with low price.
- Large LCD and simple key operation.
- The ID-U displays the absolute position of the spindle from the origin point at power-on.
- After the initial origin setting, the ID-U no longer needs absolute positioning over the entire battery life; the origin is remembered even after power-off.
- Ideal for installation into measuring devices because of it's compact design and long battery life.
- The ABSOLUTE Encoder eliminates spindle over-speed error and prevents electrical noise interference errors.
- SPC data output.

575-121

IP42

SPECIFICATIONS

Metric

Resolution	Order No. (w/ lug, flat-back)		Range	Accuracy	Measuring force	Remarks
0.01mm	—	575-121	25.4mm	0.02mm	1.8N or less	—

Inch/Metric

Resolution	Order No. (w/ lug, flat-back)		Range	Accuracy	Measuring force	Remarks
.0005"/0.01mm	—	575-122	1"	.0008"	1.8N or less	—

DIMENSION

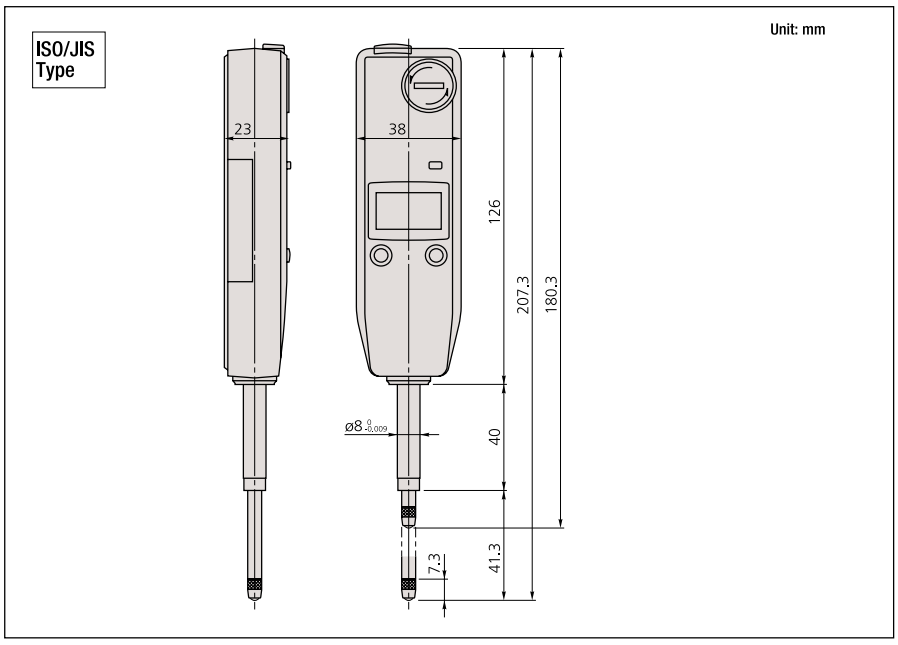

Mitutoyo

ABSOLUTE Digimatic Indicator ID-C

SERIES 543 — Standard Type

SPC

ABSOLUTE
Absolute System Patented by MITUTOYO

FEATURES

- As compact as standard Series 2 dial indicators.
- Large, easy-to-read LCD.
- ZERO/ABS key: Allows the display to be Zero-Set at any spindle position for comparison measurements. This switch will also allow return to the absolute coordinate and display of the true position from the origin point.
- GO/±NG judgment can be performed by setting upper and lower tolerance limits. The judgment result (GO/± NG) can be displayed in full-size characters.
- The positive/negative count resulting from the spindle's up/down movement can be toggled.
- Unlimited response speed eliminates spindle over-speed errors.
- The ID-C indicator face can be rotated 330° to an appropriate angle for easy reading.
- With SPC data output.

543-250
IP42

543-254
IP42

543-257
IP43

543-450B
IP42

543-464B
IP42

Technical Data

Accuracy: Refer to the list of specifications (excluding quantizing error)
Resolution: 0.01mm, 0.001mm, .0005"/0.01mm, or .00005"/0.001mm
Display: LCD
Length standard: ABSOLUTE electrostatic capacitance type linear encoder
Max. response speed: Unlimited
Measuring force: Refer to the list of specifications
Stem dia.: 8mm (ISO/JIS type)
Contact point: Carbide ball with M2.5x0.45 (ISO/JIS type)
Battery: SR44 (1 pc.), 938882
Battery life: Approx. 5,000 hours under normal use
Dust/Water protection level: IP42 or IP53 (dust-type)

Function

Origin-set/Preset, Zeroset, GO/±NG judgment, Counting direction switching, Power ON/OFF, Data output, inch/mm conversion (inch/mm models)
Alarm: Low voltage, Counting value composition error, Over-flow error, Tolerance limit setting error

Optional Accessory

905338: SPC cable (1m)
905409: SPC cable (2m)
902011: Spindle lifting lever (ISO/JIS type)*
137693: Spindle lifting hook**
540774: Spindle lifting cable
125317: Spare rubber boot (for dust-proof type)
02ACA571: Auxiliary spindle spring for 25mm/1" models***
02ACA773: Auxiliary spindle spring for 50mm/2" models***
(*) Can be used on 12mm/.5" models only.
(**) Can be used on 25mm/1" or 50.8mm/2" models.
(***) Required when orienting the indicator upside down.

DIMENSION

ISO/JIS Type

Unit: mm

12.7mm range models

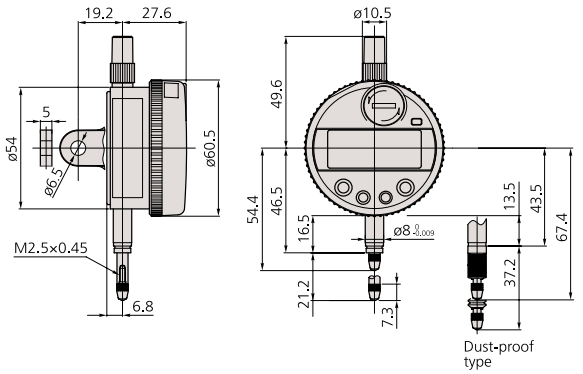

25.4mm range models

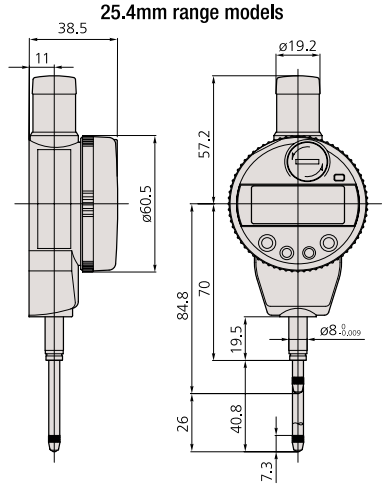

50.8mm range models

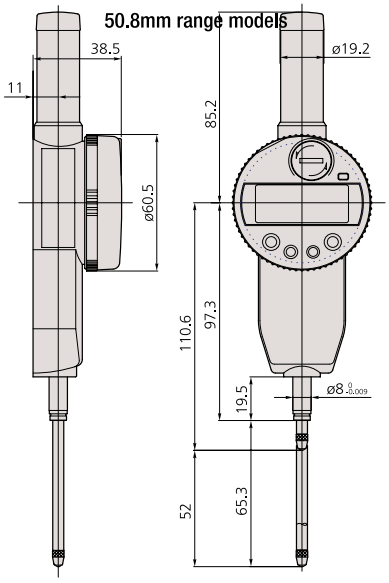

SPECIFICATIONS

Metric

Resolution	Order No. (w/ lug, flat-back)		Range	Accuracy	Measuring force	Remarks
0.001mm	543-250	543-250B	12.7mm	0.003mm	1.5N or less	—
0.001mm	543-257	543-257B	12.7mm	0.003mm	2.0N or less	Dust-proof
0.001mm	543-254	543-254B	12.7mm	0.003mm	0.4N - 0.7N	Low measuring force
0.001mm	—	543-450B	25.4mm	0.003mm	1.8N or less	—
0.001mm	—	543-460B	50.8mm	0.006mm	2.3N or less	—
0.01mm	543-290	543-290B	12.7mm	0.005mm	1.5N or less	—
0.01mm	543-270	543-270B	12.7mm	0.02mm	0.9N or less	—
0.01mm	543-277	543-277B	12.7mm	0.002mm	2.0N or less	Dust-proof
0.01mm	543-274	543-274B	12.7mm	0.002mm	0.2N - 0.5N	Low measuring force
0.01mm	—	543-457B	25.4mm	0.005mm	1.8N or less	—
0.01mm	—	543-454B	25.4mm	0.03mm	1.8N or less	—

Inch/Metric

Resolution	Order No. (w/ lug, flat-back)		Range	Accuracy	Measuring force	Remarks
.00005”/0.001mm	543-251	543-251B	.5”	.00012”	1.5N or less	—
.00005”/0.001mm	543-258	543-258B	.5”	.00012”	2.0N or less	Dust-proof
.00005”/0.001mm	543-255	543-255B	.5”	.00012”	0.4N - 0.7N	Low measuring force
.00005”/0.001mm	—	543-451B	1”	.00012”	1.8N or less	—
.00005”/0.001mm	—	543-461B	2”	.00025”	2.3N or less	—
.0005”/0.01mm	543-291	543-291B	.5”	.0002”	1.5N or less	—
.0005”/0.01mm	543-271	543-271B	.5”	.0008”	0.9N or less	—
.0005”/0.01mm	543-278	543-278B	.5”	.0008”	2.0N or less	Dust-proof
.0005”/0.01mm	543-275	543-275B	.5”	.0008”	0.2N - 0.5N	Low measuring force
.0005”/0.01mm	—	543-458B	1”	.0002”	1.8N or less	—
.0005”/0.01mm	—	543-455B	1”	.0012”	1.8N or less	—
.0005”/0.01mm	—	543-465B	2”	.0016”	2.3N or less	—

Metric (New Model)

Resolution*	Oder NO. (W/lug, flat-back)		Rang	Accuracy	Measuring force	Remarks
0.001mm	**543-390**	**543-390B**	12.7mm	0.003mm	1.5N or less	-
0.001mm	**543-394**	**543-394B**	12.7mm	0.003mm	0.4N-0.7N	Low measuring force
0.001mm	**-**	**543-470B**	25.4mm	0.003mm	1.8N or less	-
0.001mm	**-**	**543-490B**	50.8mm	0.005mm	2.3N or less	-
0.01mm	**543-400**	**543-400B**	12.7mm	0.02mm	0.9N or less	-
0.01mm	**543-404**	**543-404B**	12.7mm	0.02mm	0.2N-0.5N	Low measuring force
0.01mm	**-**	**543-474B**	25.4mm	0.02mm	1.8N or less	-
0.01mm	**-**	**543-494B**	50.8mm	0.04mm	2.3N or less	-

Inch / Metric (New Model)

Resolution*	Oder NO. (W/lug, flat-back)		Rang	Accuracy	Measuring force	Remarks
.00005"/0.001mm	**543-391**	**543-391B**	.5"	.0001"	1.5N or less	-
.00005"/0.001mm	**543-395**	**543-395B**	.5"	.0001"	0.4N-0.7N	Low measuring force
.00005"/0.001mm	**-**	**543-471B**	1"	.0001"	1.8N or less	-
.00005"/0.001mm	**-**	**543-491B**	2"	.0002"	2.3N or less	-
.0005"/0.01mm	**543-401**	**543-401B**	.5"	.001"	0.9N or less	-
.0005"/0.01mm	**543-405**	**543-405B**	.5"	.001"	0.2N-0.5N	Low measuring force
.0005"/0.01mm	**-**	**543-475B**	1"	.001"	1.8N or less	-
.0005"/0.01mm	**-**	**543-495B**	2"	.0015"	2.3N or less	-

Mitutoyo

ABSOLUTE Digimatic Indicator ID-C

SERIES 543 — Calculation Type

SPC

ABSOLUTE®
Absolute System Patented by MITUTOYO

FEATURES

A conventional Digimatic indicator simply displays a spindle displacement, but the Calculation-Type Digimatic indicator incorporates an internal calculation function in place of spindle displacement. With fixtures, measurements such as feeler, inside diameter and radius of curvature measurement can easily be obtained without the hassle of conversion tables or equivalents.

- The Absolute Digimatic indicator performs internal calculations using the formula $Ax+B+Cx^{-1}$ (assuming spindle displacement as x) while the specified coefficients A, B and, C can be set with respect to the purpose of measurement or dimensions of the fixtures. This unique features allows you to read your measurements directly, without fumbling for conversions.

543-285B

Technical Data

Accuracy: Refer to the list of specifications (excluding quantizing error)
Resolution: 0.0002mm - 1mm or .00001" - .05"/0.0002mm - 1mm
Display: LCD
Length standard: ABSOLUTE electrostatic capacitance type linear encoder
Max. response speed: Unlimited
Measuring force: 1.5N or less
Stem dia.: 8mm (ISO/JIS type)
Contact point: Carbide ball with M2.5x0.45 (ISO/JIS type)
Battery: SR44 (1 pc.), 938882
Battery life: Approx. 12 months under normal use

Function

Origin-set/Preset, Zeroset, GO/±NG judgment, Counting direction switching, Power ON/ OFF, Data output, inch/mm conversion (inch/mm models)
Alarm: Low voltage, Counting value composition error, Over-flow error, Tolerance limit setting error

Optional Accessory

905338: SPC cable (1m)
905409: SPC cable (2m)
902011: Spindle lifting lever (ISO/JIS type)
540774: Spindle lifting cable

SPECIFICATIONS

Metric

Resolution	Order No.*	Range	Accuracy
0.0002 - 1mm (switchable)	543-285B	12.7mm	0.003mm
	543-480B	25.4mm	0.003mm
	543-485B	50.8mm	0.006mm

*Flat back

Inch/Metric

Resolution	Order No.*	Range	Accuracy
.00001" - .05"/ 0.0002 - 1mm (switchable)	543-286B	.5"	.00012"
	543-481B	1"	.00012"
	543-486B	2"	.00025"

*Flat back

APPLICATIONS

- Various fixtures suited for individual workpieces can be prepared.
- Measuring accuracy is subject to fixture accuracy

DIMENSION

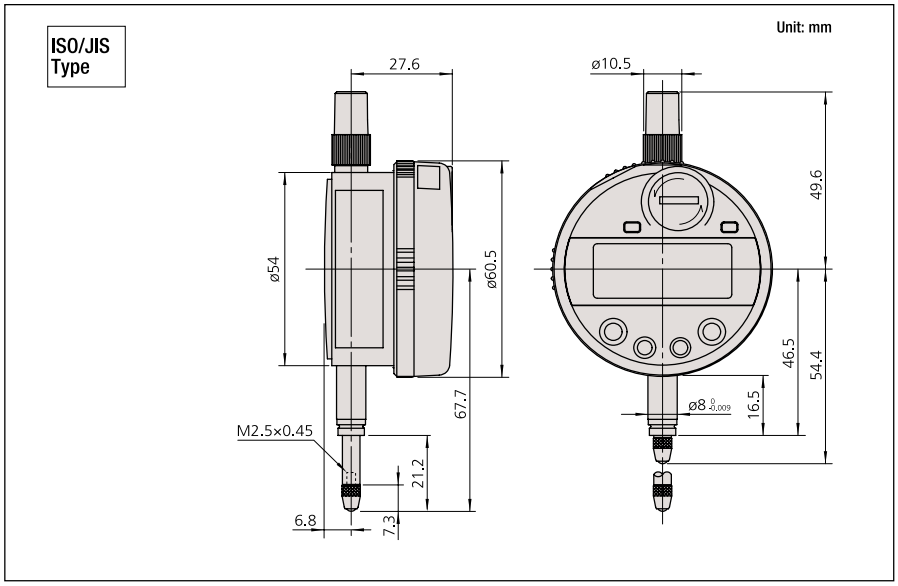

Mitutoyo

ABSOLUTE Digimatic Indicator ID-C

SERIES 543 — with Green/Red LED and GO/NG Signal Output Function

IP54

ABSOLUTE®
Absolute System Patented by MITUTOYO

FEATURES

- With the max./min. value holding function, the signal ID-C can output the signal of the GO/±NG judgment result against the peak values set. Substitute for the mechanical/electrical contact, the judgment is carried out by calculating the measurement data obtained. This provides high reliability with no deterioration of the contact point and volume adjustment.
- The signal can be output to an external device like a sequencer through the NPN open-collector.
- The GO/±NG judgment result is also indicated by the green/red LED and the "<, 0, >" signs on LCD.
- Employing the ABSOLUTE linear encoder, the Signal ID-C always displays the spindle "Absolute Position" from the origin at power-on. Also unlimited response speed eliminates over-speed errors.
- The Signal ID-C achieves the IP54 protection level to resist dust and contaminants for safe operation in harsh machine shop environments.

543-280

Technical Data

Accuracy: Refer to the list of specifications (excluding quantizing error)
Resolution: 0.001mm, .00005"/0.001mm
Display: LCD
Length standard: ABSOLUTE electrostatic capacitance type linear encoder
Max. response speed: Unlimited
Measuring force: 2.0N or less
Stem dia.: 8mm (ISO/JIS type)
Contact point: Carbide ball with M2.5x0.45 (ISO/JIS type)
Power supply: DC 12 - 24V±10%
Dust/Water protection level: IP54

Function

Data output (–NG/OK/NG signal, NPN open collector), Remote control (hold-preset, preset-recall, zero-set),
Origin-set/Preset, Zeroset, GO/±NG judgment, Max/Min/Runout value holding, Counting direction switching, Power ON/OFF, inch/mm conversion (inch/mm models)
Alarm: Low voltage, Counting value composition error, Over-flow error, Tolerance limit setting error

Optional Accessory

902011: Spindle lifting lever* (ISO/JIS type)
540774: Spindle lifting cable*
125317: Rubber boot
*When using the spindle lifting lever/cable, IP54 is not guaranteed.

SPECIFICATIONS

Metric

Resolution	Order No. (w/ lug, flat-back)		Range	Accuracy	Measuring force	Remarks
0.001mm	543-280	543-280B	12.7mm	0.003mm	2.0N or less	—

Inch/Metric

Resolution	Order No. (w/ lug, flat-back)		Range	Accuracy	Measuring force	Remarks
.00005"/0.001mm	543-281	543-281B	.5"	.00012"	2.0N or less	—

Output pattern

Wire	– NG	OK	+ NG	Composition error
Orange (– NG)	Low	High	High	High
Green (OK)	High	Low	High	High
Brown (+ NG)	High	High	Low	High
LED	Red	Green	Red	Red (blinking)
LCD	<	0	>	"x.xxE" indication

I/O Specifications

Wire	Signal	I/O	Description
Black	– V (GND)	—	Connected to minus (-) terminal
Red	+ V (GND)	I	Power supply (12 - 24VDC)
Orange	– NG	O	Tolerance judgment result output: Only the terminal corresponding to a judgment result is set to the below level.
Green	OK	O	
Brown	+ NG	O	
Yellow	PRESET_RECALL ZERO	I	External input terminal: If the relevant terminal is set to the low level, its signal becomes true.
Blue	HOLD_RESET	I	
Shield	FG	—	Connected to GND

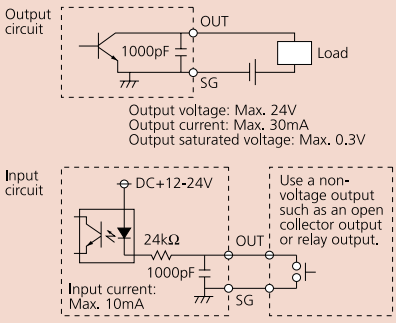

DIMENSION

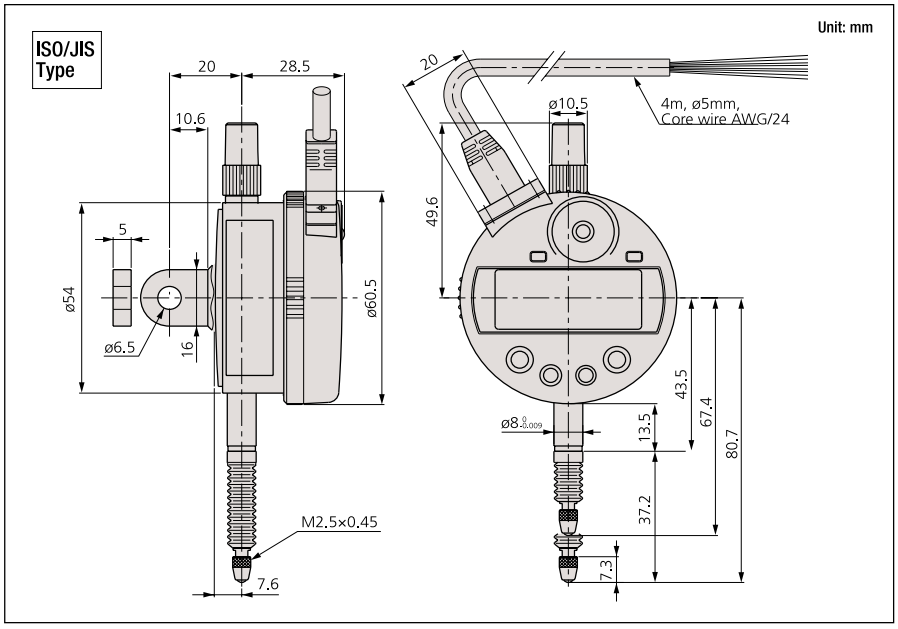

Mitutoyo

ABSOLUTE Digimatic Indicator ID-C

SERIES 543 — with Max./Min. Value Holding Function

With max./min. value holding function model of the ID-C Series Digimatic Indicators.

FEATURES

- The maximum, minimum, or runout value can be displayed during measurement.
- GO/±NG judgment is performed by setting the upper and lower tolerances for max., min. and runout values.
- High speed sampling ratio of 50 times/s.

543-262

SPECIFICATIONS

Metric

Resolution	Order No.*	Range	Accuracy
0.001mm	543-260	12.7mm	0.003mm

*Back with lug

Inch/Metric

Resolution	Order No.*	Range	Accuracy
.00005”/0.001mm	543-261	.5”	.00012”

*Back with lug

DIMENSION

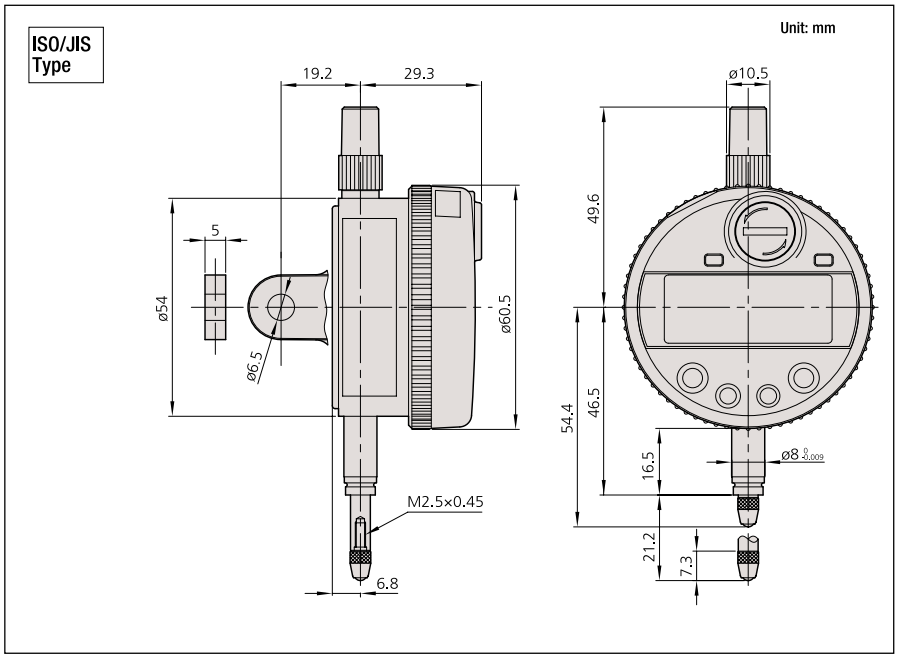

SPC

ABSOLUTE®
Absolute System Patented by MITUTOYO

Technical Data

Accuracy: Refer to the list of specifications (excluding quantizing error)
Resolution: 0.001mm, .00005”/0.001mm
Display: LCD
Length standard: ABSOLUTE electrostatic capacitance type linear encoder
Max. response speed: Unlimited
Measuring force: 1.5N or less
Stem dia.: 8mm (ISO/JIS type) or 3/8” (ANSI/AGD type)
Contact point: Carbide ball with M2.5x0.45 (ISO/JIS type)
Battery: SR44 (2 pcs.), 938882
Battery life: Approx. 800 - 1300 hours under normal use
Dust/Water protection level: IP42

Function

Origin-set/Preset, Zeroset, GO/±NG judgment, Max/Min/Runout value holding, Counting direction switching, Power ON/OFF, Data output, inch/mm conversion (inch/mm models)
Alarm: Low voltage, Counting value composition error, Over-flow error, Tolerance limit setting error

Optional Accessory

905338: SPC cable (1m)
905409: SPC cable (2m)
902011: Spindle lifting lever (ISO/JIS type)
540774: Spindle lifting cable

Mitutoyo

ABSOLUTE Digimatic Indicator ID-C

SERIES 543 — Specially Designed for Bore Gage Application

This ID-C Series Digimatic Indicators are exclusively designed for ID measurement.

543-264B

FEATURES

- The minimum value holding function provides the easy of detection of hole diameter.
- An analog bar indicator is integrated to enhance the intuition in reading.
- GO/±NG judgment is performed by setting the upper and lower tolerances.
- Up to three sets of master value and upper/lower tolerance value can be memorized.

Technical Data

Accuracy: Refer to the list of specifications (excluding quantizing error)
Resolution: 0.001mm
Display: LCD
Length standard: ABSOLUTE electrostatic capacitance type linear encoder
Max. response speed: Unlimited
Measuring force: 1.5N or less
Stem dia.: 8mm (ISO/JIS type)
Contact point: Carbide ball with M2.5x0.45 (ISO/JIS type)
Battery: SR44 (2 pcs.), 938882
Battery life: Approx. 2000 hours under normal use
Dust/Water protection level: IP42

Function

Origin-set/Preset, Zeroset, GO/±NG judgment, Counting direction switching, Power ON/OFF, Data output, inch/mm conversion (inch/mm models)
Alarm: Low voltage, Counting value composition error, Over-flow error, Tolerance limit setting error

Optional Accessory

905338: SPC cable (1m)
905409: SPC cable (2m)
526-170: Bore gage probe (0.95 - 1.55mm)
526-160: Bore gage probe (1.5 - 4.0mm)
526-150: Bore gage probe (3.7 - 7.3mm)
526-101: Bore gage probe (7.0 - 10.0mm)
526-102: Bore gage probe (10 - 18mm)
526-126: Bore gage probe (18 - 35mm)
526-127: Bore gage probe (35 - 60mm)
526-132: Bore gage probe (50 - 150mm)

Installed on bore gage probe (511-127)

SPECIFICATIONS

Metric

Resolution	Order No.*	Range	Accuracy
0.001mm	543-264B	12.7mm	0.003mm

*Back with lug

DIMENSION

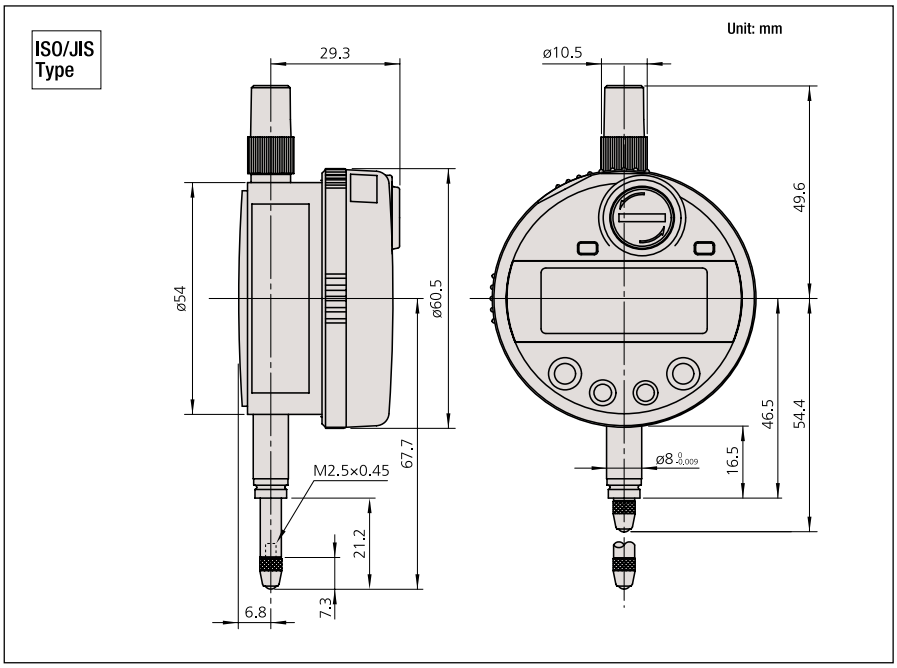

Mitutoyo

ABSOLUTE Digimatic Indicator ID-H

SERIES 543 — High Accuracy and High Functional Type

SPC

Mitutoyo guarantees the product quality. PROPRIETARY INSPECTION CERTIFICATE Mitutoyo guarantees the product quality.

FEATURES

- This new-generation digital indicator offers the excellent accuracy and functionality expected from this class of indicator. Take advantage of its high accuracy backed up by 0.5µm / .00002" resolution, remote control functionality via a handheld controller (or an RS-232C interface) and easy runout measurements with the well-established analog bar display.
- The maximum, minimum, or runout value can be displayed during measurement.
- GO/±NG judgment is performed by setting the upper and lower tolerances. If a judgment result is out of tolerance, the display backlighting changes from green to red, so tolerance judgment can be made at a glance.
- With SPC data output.
- With RS-232C input/output

543-561 543-563

Remote controller (optional)

SPECIFICATIONS

Metric

Resolution	Order No.*	Range	Accuracy
0.0005mm, 0.001mm	543-561E	30.4mm	0.0015mm
	543-563E	60.9mm	0.0025mm

* To denote your AC line voltage add the following suffixes to the order No.
A for 120V K for 100V D for 220V E for 240/220V DC for China
No suffix is required for 100V

Inch/Metric

Resolution	Order No.*	Range	Accuracy
.00005", .0001", 0.0005mm, 0.001mm	543-562E	1.2"	0.0015mm
	543-564E	2.4"	0.0025mm

* To denote your AC line voltage add the following suffixes to the order No.
A for 120V K for 100V D for 220V E for 240/220V DC for China
No suffix is required for 100V

Tolerance judgment

Analog bar display

Max/Min value measurement

Runout easurement

Resolution switching

DIMENSION

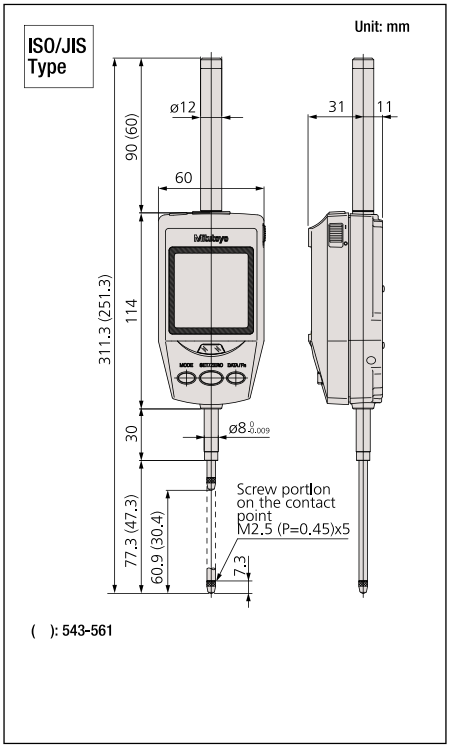

Technical Data

Accuracy: Refer to the list of specifications (excluding quantizing error)
Resolution: 0.0005mm/0.001mm or .00005" /.0001"/0.0005mm/0.001mm
Display: LCD
Length standard: Linear encoder
Max. response speed: 1000mm/s
Measuring force: 2.0N/2.5N* or less (*60mm range models)
Stem dia.: 8mm (ISO/JIS type)
Contact point: Carbide ball with M2.5x0.45 (ISO/JIS type)
Power supply: 6V DC (via AC adaptor)

Function

Origin-set/Preset, Zeroset, GO/±NG judgment, Max/Min value hold, Runout measurement, Resolution switching, Counting direction switching, Power ON/OFF, Data output, inch/mm conversion (inch/mm models)
Alarm: Low voltage, Counting value composition error, Over-flow error, Tolerance limit setting error

Optional Accessory

936937: SPC cable (1m)
965014: SPC cable (2m)
21EAA131: RS-232C cable (2m)
21EZA099: Remote controller
540774: Spindle lifting cable (stroke: 30mm)
21EZA101: Spindle lifting knob
264-504: Digimatic Min-processor DP-1VR
543-004: Digimatic presetter
215-154: Granite comparator stand
215-504: Comparator stand
215-821: Comparator stand
*Required when orienting the indicator upside down.

Application

Difference/Runout measurement
Example: Indicator travel from points A to D
Difference (or Total Runout) is displayed as A.
Dimensions B (maximum value) and C (minimum value) can be recalled from memory with a simple key sequence.

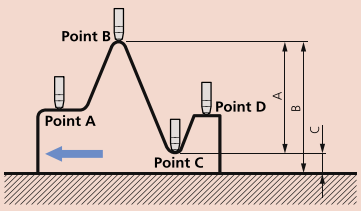

Mitutoyo

ABSOLUTE Digimatic Indicator ID-F

SERIES 543 — with Back-lit LCD Screen

SPC

ABSOLUTE®
Absolute System Patented by MITUTOYO

FEATURES

- With the ABSOLUTE Linear Encoder technology, once the measurement reference point has been preset it will not be lost when the power is turned on.
- GO/±NG judgment is performed by setting the upper and lower tolerances. If a judgment result is out of tolerance, the display backlighting changes from green to red, so tolerance judgment can be made at a glance.
- The maximum, minimum, or runout value can be displayed during measurement.
- An analog bar indicator has been integrated to handle upper/lower limit approaching and zero approaching. It enhances the ease of operation in the same manner as a dial indicator. The display range of the analog bar can be changed.
- With SPC data output.

543-552 543-554

Technical Data

Accuracy: Refer to the list of specifications (excluding quantizing error)
Resolution: 0.01mm/0.001mm or .00002" .00005"/.0001"/.0005"/.001" /0.001mm/0.01mm
Display: LCD
Length standard: ABSOLUTE electrostatic capacitance type linear encoder
Max. response speed: Unlimited
Measuring force: 1.8N/2.3N* or less (*50mm range models)
Stem dia.: 8mm (ISO/JIS type)
Contact point: Carbide ball with M2.5x0.45 (ISO/JIS type)
Power supply: 9V DC (via AC adaptor)

Function

Origin-set/Preset, Zeroset, GO/±NG judgment, Max/Min value hold, Runout measurement, Resolution switching, Counting direction switching, Power ON/OFF, Data output, inch/mm conversion (inch/mm models)
Alarm: Low voltage, Counting value composition error, Over-flow error, Tolerance limit setting error

Optional Accessory

936937: SPC cable (1m)
965014: SPC cable (2m)
21EAA131: RS-232C cable (2m)
540774: Spindle lifting cable (stroke: 10mm)
02ACA571: Auxiliary spindle spring for 25mm/1" models*
02ACA773: Auxiliary spindle spring for 50mm/2" models*
264-504: Digimatic Min-processor DP-1VR
543-004: Digimatic presetter
215-154: Granite comparator stand
215-504: Comparator stand
215-821: Comparator stand
*Required when orienting the indicator upside down.

SPECIFICATIONS

Metric

Resolution	Order No.*	Range	Accuracy
0.001mm, 0.01mm	543-551E	25mm	0.003mm
	543-557E	50mm	0.003mm
	543-553E	50mm	0.006mm

* To denote your AC line voltage add the following suffixes to the order No.
A for 120V K for 100V D for 220V E for 240/220V DC for China
No suffix is required for 100V

Inch/Metric

Resolution	Order No.*	Range	Accuracy
.00002", .00005", .0001", .0005", .001", 0.001mm, 0.01mm	543-552E	1"	.00012"
	543-558E	2"	.00012"
	543-554E	2"	.00024"

* To denote your AC line voltage add the following suffixes to the order No.
A for 120V K for 100V D for 220V E for 240/220V DC for China
No suffix is required for 100V

DIMENSION

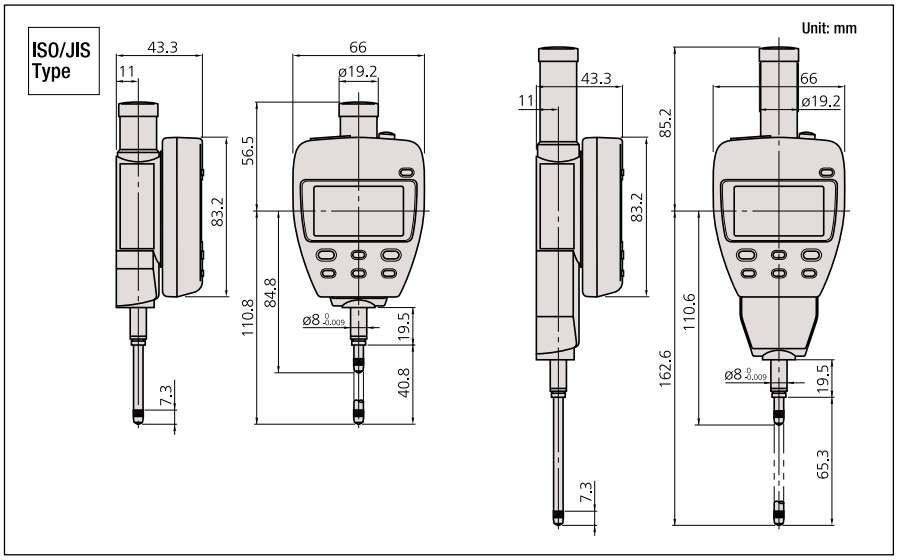

Application

Difference/Runout measurement
Example: Indicator travel from points A to D
Difference (or Total Runout) is displayed as A.
Dimensions B (maximum value) and C (minimum value) can be recalled from memory with a simple key sequence.

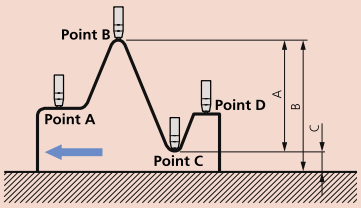

Mitutoyo

ABSOLUTE Digimatic Indicator ID-N / B

SERIES 543 — with Dust/Water Protection Conforming to IP66

FEATURES

- Proven ABSOLUTE sensor.
- Rated to IP66 water- and dust-proofing standard and oil resistance improved.
- Slim body design is advantageous for multi-point measurements.
- Improvement in workability with the LCD readout-rotation function.
- Back plunger design (ID-B).
- Built-in tolerance judgment function.
- Switchable resolution.
- Waterproof data output connector.
- Built-in hold/preset function

Slim type ID-N
543-575

Back plunger type ID-B
543-585

SPECIFICATIONS

Metric

Resolution	Order No.	Range	Accuracy	Remarks
0.01mm	543-570	12.7mm	0.02mm	Slim type ID-N
0.01mm	543-580	5.0mm	0.02mm	Back plunger type ID-B
0.01mm / 0.001mm	543-575	12.7mm	0.01mm / 0.003mm	Slim type ID-N
0.01mm / 0.001mm	543-585	5.0mm	0.01mm / 0.003mm	Back plunger type ID-B

DIMENSION

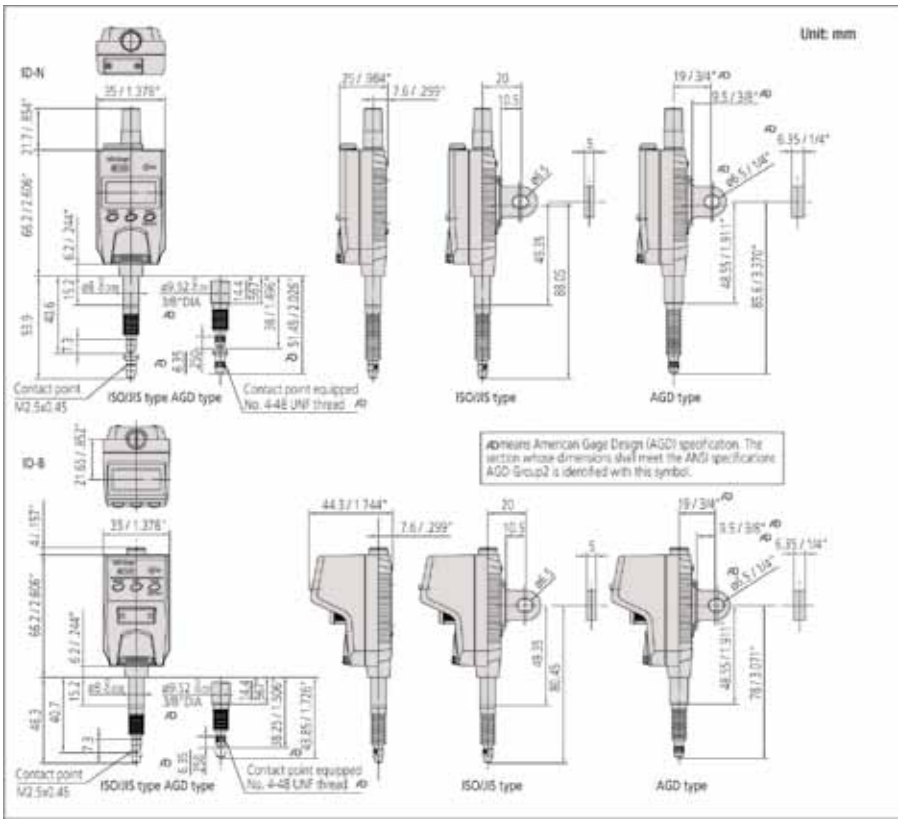

Technical Data

Accuracy: Refer to the list of specifications (excluding quantizing error)
Resolution: 0.01mm, 0.01mm/0.001mm
Display: LCD
Length standard: ABSOLUTE electrostatic capacitance type linear encoder
Max. response speed: Unlimited
Measuring force: 2.5N (2.0N: Back plunger type)
Stem dia.: 8mm
Contact point: Carbide ball with M2.5x0.45
Battery: SR44 (1 pc.), 938882
Battery life: Approx. 7000 hours under normal use
Dust/Water protection level: IP66

Function

Zero-setting, Presetting, Direction switching, Tolerance judgment, Display hold, Data output, inch/mm conversion (inch/mm models)
Alarm: Low voltage, Counting value composition error, Over-flow error, Tolerance limit setting error

Optional Accessory

21EZA105: Lifting knob (for ISO/JIS model)
21EZA150: Lifting knob (for AGD model)
21EZA145: Lug (for JIS/ISO model)
21EZA146: Lug (for AGD model)
02ACA376: Rubber boot (for ID-N, NBR)
238774: Rubber boot (for ID-N, silicon)
125317: Rubber boot (for ID-B, NBR)
21EAA212: Rubber boot (for ID-B, silicon)
21EAA194: Connecting cable (1m)
21EAA190: Connecting cable (2m)
21EAA210: Bifurcated connecting cable with zero-setting terminal (1m)
21EAA211: Bifurcated connecting cable with zero-setting terminal (2m)

Dial Indicator

Description of Icon

Icon	Description
	Reverse reading type suitable for depth and step measurement.
	One revolution type for easy and error-free reading
	Double scale spacing type, easy-on-the-eyes
	Shockproof type
	Waterproof type
	With damper at lowest rest point
	Jeweled bearing type
STOP	Peak retaining type
2X	Long stem type
	Dustproof type
	With coaxial revolution counter
90°	Back plunger type
	Adjustable hand type
	Double-face type

FEATURES: S Series

- Revolutionary stem-bush design for trouble free stem clamping (longer clamping range).
- No through screw-hole on the frame for high dust-resistance.

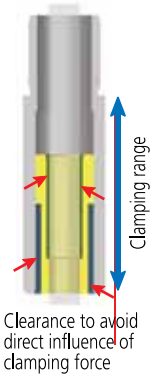

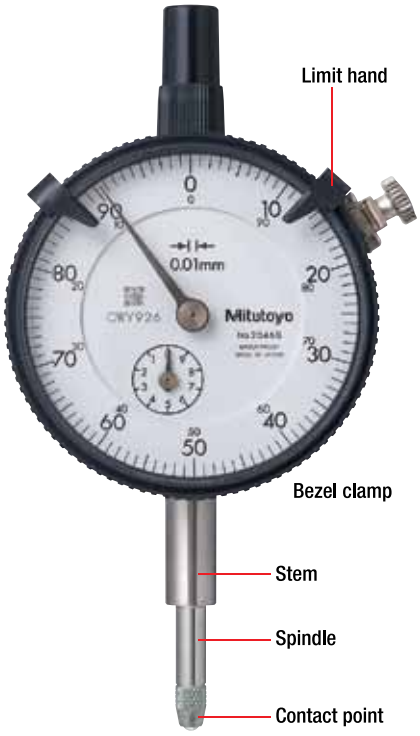

- Involute curved lifting lever for smooth movement of spindle and dovetail joint for tool-less connection.
- Grater rigidity in the bearing plate for reducing the retracing error (20%) and 4-screw mounting for increasing impact resistance.

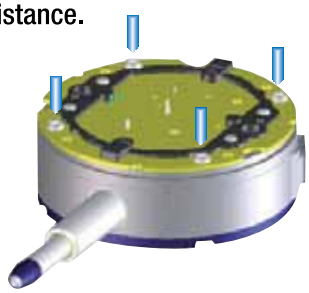

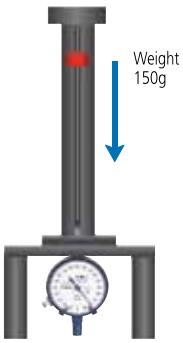

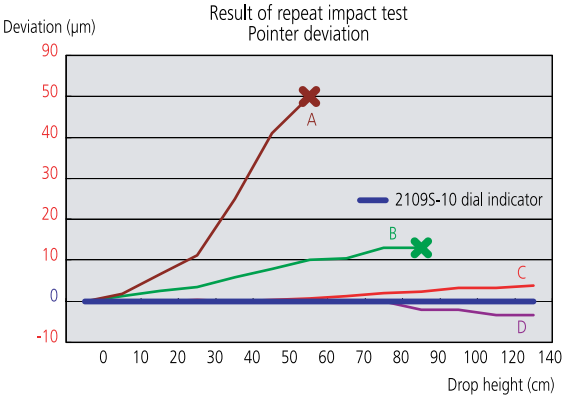

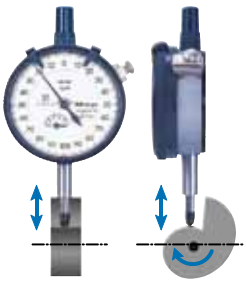

Endurance testing with cam
Rotation speed: 120rpm

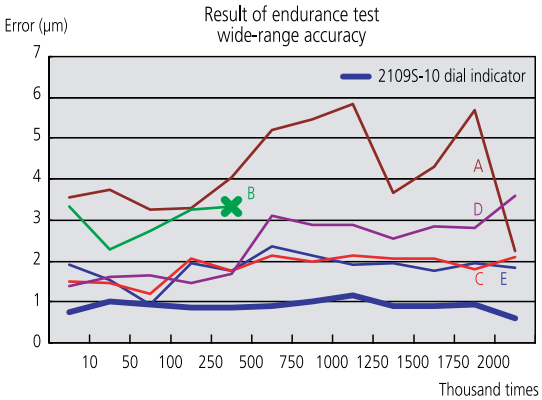

Mitutoyo

Dial Indicator

SERIES 1 — Compact Type

Mitutoyo's Series 1 dial indicators off the accuracy and durability for shop applications demanding highly accurate measurements where space is limited. The spindle is made of hardened stainless steel for durability, while the rack gear is machine ground for a tighter fit and increased accuracy.

1911

1911

1913-10

1003

1003

1040S

1044S-60

1013S

Double scale specing type | Jeweledproof type | Waterproof type

SPECIFICATIONS

Metric

Graduation	Order No. w/ lug	Order No. Flat-back	Range (range/rev)	Accuracy	Dial reading	Measuring force				—	—	—
0.01mm	1911	1911SB	2.5mm (1mm)	±12µm	0-50-0	1.4N or less	—	—	—	—	—	—
0.002mm	1913-10	1913SB -10	0.5mm (0.2mm)	±8µm	0-100-0	1.5N or less	—	✔	—	—	—	—
0.01mm	1040S	1040SB	3.5mm (0.5mm)	±13µm	0-50	1.4N or less	✔	—	—	—	—	—
0.01mm	1041S	1041SB	3.5mm (0.5mm)	±13µm	0-25-0	1.4N or less	✔	—	—	—	—	—
0.01mm	1003	1003B	4mm (1mm)	±13µm	0-50-0	1.4N or less	—	—	—	—	—	—
0.01mm	1044S	1044SB	5mm (1mm)	±13µm	0-100	1.4N or less	—	—	—	—	—	—
0.01mm	1044S-10	1044SB-10	5mm (1mm)	±13µm	0-100	0.4N or less*	—	✔	—	—	—	—
0.01mm	1044S-60	1044SB-60	5mm (1mm)	±13µm	0-100	2.0N or less	—	—	✔	—	—	—
0.01mm	1045S	1045SB	5mm (1mm)	±13µm	0-50-0	1.4N or less	—	—	—	—	—	—
0.005mm	1124S	1124SB	3.5mm (0.5mm)	±13µm	0-50	1.4N or less	—	✔	—	—	—	—
0.002mm	1013S	1013SB	1mm (0.2mm)	±10µm	0-100-0	1.5N or less	—	✔	—	—	—	—
0.001mm	1109S	1109SB	1mm (0.2mm)	±7µm	0-100-0	1.5N or less	—	✔	—	—	—	—

*Use in a vertical position only (contact point downward).

1040S

1041S

1044S
1044S -10
1044S -60

1045S

1124S

1013S

1109S

DIMENSION

ISO/JIS Type

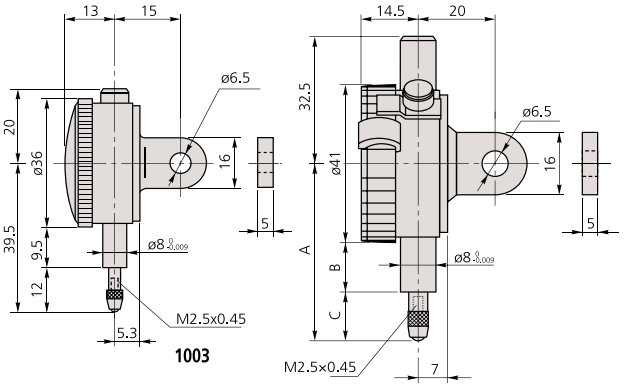

1003

Unit: mm

Order No.	A	B	C
1040S	46	13	12.5
1041S	46	13	12.5
1044S	47.5	13	14
1044S-10	47.5	13	14
1044S-60	57	11.5	25
1045S	47.5	13	14
1124S	46	13	12.5
1013S	49	13	15.5
1109S	49	13	15.5

Mitutoyo

Dial Indicator

SERIES 1 — Compact One Revolution Type for Error-free Reading

One revolution type

1929S-62

Unlike many other dial indicators, the one-revolution dial indicator literally shows the entire spindle travel or range as one sweep of the hand, eliminating the possibility of reading errors due to miscounting the multiple revolutions. With one-revolution dial indicators, "within tolerance" and "out-of-tolerance" can never misinterpreted
An unique shock-proof mechanism is incorporated, providing improved immunity to shock due to sudden spindle retraction caused by high impact.

1929S
1929S-60
1929S-62

1900S
1900S-60
1900S-62

Schockproof type
Dustproof type
Waterproof type
Jeweledproof type

SPECIFICATIONS

Metric

Graduation	Order No. w/ lug	Order No. Flat-back	Range (range/full stroke)	Accuracy	Dial reading	Measuring force					—
0.01mm	1929S	1929SB	1mm / 1.4mm	±11µm	50-0-50	1.4N or less	✔	—	—	—	—
0.01mm	1929S-60	1929SB-60	1mm / 1.4mm	±11µm	50-0-50	1.4N or less	✔	—	✔	—	—
0.01mm	1929S-62	1929SB-62	1mm / 1.4mm	±11µm	50-0-50	1.4N or less	✔	✔	—	—	—
0.001mm	1900S	1900SB	0.1mm / 0.14mm	±6µm	50-0-50	1.5N or less	✔	—	—	✔	—
0.001mm	1900S-60	1900SB-60	0.1mm / 0.14mm	±6µm	50-0-50	1.5N or less	✔	—	✔	✔	—
0.001mm	1900S-62	1900SB-62	0.1mm / 0.14mm	±6µm	50-0-50	1.5N or less	✔	✔	—	✔	—
0.01mm	1960*	—	1mm / 1.27mm	±14µm	50-0-50	1.4N or less	✔	—	—	—	—

DIMENSION

ISO/JIS Type

Unit: mm

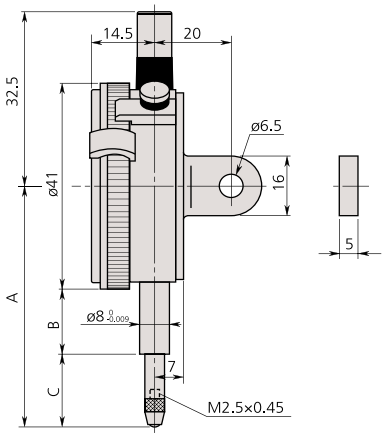

Note 1: Dimensions of the inch (ANSI/AGD Type) dial indicator partly differ from those of the metric (ISO/JIS Type) indicator.
Note 2: Inch (ANSI/AGD Type) dial indicator is provided with a stem of 3/8" dia. and #4-48UNF thread mount for the contact point.

Order No.	A	B	C
1929F	47.5	13	14
1929F	55.5	11.5	23.5
1929F-62	47.5	13	14
1900F	53.5	16	17
1900F-60	54.5	11.5	22.5
1900F-62	53.5	16	17

Dial Indicator

SERIES 2 — Standard Type, 0.01mm Resolution

Series 2 dial indicators are Mitutoyo's most popular, and have the widest application.

FEATURES

- Standard 0.01mm graduation dial gauges having an outer frame with an outside diameter of 57mm. All types come with limit pins and an outer frame clamp as standard.
- The outer clamp and lifting lever (optional) can be attached to either the right or left side. These parts can be easily installed and removed without tools.
- Secured adhesion between the outer frame and crystal as well as the use of an O-ring ensure countermeasures against water and oil permeation via the front face.
- The stem spindle is made of high-strength quench-hardened stainless steel which resists strenuous use.
- A carbide contact point is used.
- The grand gear uses stainless steel that is resistant to wear and deformation.
- Application of a hard coating on the surface of the crystal makes the gauge highly scratch- and chemical-resistant.

2046S
2046SH
2046S-09
2046S-15
2046S-80
2046SLB

2046SY

2046S-60
2046S-69

2047S

2046S

2046S-60

Mitutoyo

Schockproof type | Waterproof type | Long stem type | Jewele bearing type
w/ coaxial revolution counter | Reverse reading type

SPECIFICATIONS

Metric

Graduation	Order No. w/ lug	Order No. Flat-back	Range (range/rev)	Accuracy	Dial reading	Measuring force	Schockproof type	Waterproof type	Long stem type	Jewele bearing type	w/ coaxial revolution counter	Reverse reading type
0.01mm	2044S	2044SB	5mm (1mm)	±12µm	0-100	1.4N or less	—	—	—	—	—	—
0.01mm	2044S-09	2044SB-09	5mm (1mm)	±13µm	0-100	1.4N or less	✔	—	—	—	—	—
0.01mm	2044S-60	2044SB-60	5mm (1mm)	±12µm	0-100	2.5N or less	—	✔	—	—	—	—
0.01mm	2045S	2045SB	5mm (1mm)	±12µm	0-50-0	1.4N or less	—	—	—	—	—	—
0.01mm	2046S	2046SB	10mm (1mm)	±13µm	0-100	1.4N or less	—	—	—	—	—	—
0.01mm	2046S-09	2046SB-09	10mm (1mm)	±15µm	0-100	1.4N or less	✔	—	—	—	—	—
0.01mm	2046S-60	2046SB-60	10mm (1mm)	±13µm	0-100	2.5N or less	—	✔	—	—	—	—
0.01mm	2310S-10	2310SB-10	10mm (1mm)	±15µm	0-100	1.4N or less	—	—	—	✔	✔	—
0.01mm	2902S	2902SB	10mm (1mm)	±13µm	100-0	1.4N or less	—	—	—	—	—	✔
0.01mm	2047S	2047SB	10mm (1mm)	±13µm	0-50-0	1.4N or less	—	—	—	—	—	—

*Use in a vertical position only (contact point downward).

2902S

2310S-10

2044S
2044S-60
2044S-09

2045S

DIMENSION

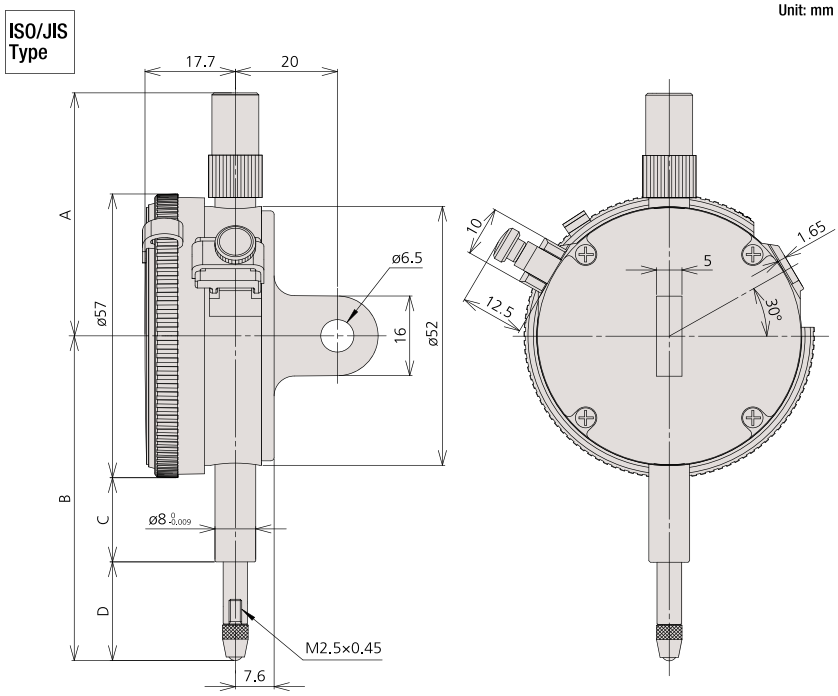

Order No.	A	B	C	D
2044S	48.8	65.2	16.9	19.8
2044S-09	48.8	65.2	16.9	19.8
2044S-60	48.8	70	12.3	29.2
2045S	48.8	65.2	16.9	19.8
2046S	48.8	65.2	16.9	19.8
2046S-09	48.8	65.2	16.9	19.8
2046S-60	48.8	70	12.3	29.2
2310S-10	48.8	65.2	16.9	19.8
2902S	48.8	65..2	16.9	19.8
2047S	48.8	65.2	16.9	19.8

Dial Indicator

SERIES 2 — Standard Type, 0.001mm Resolution

2109S-10
2109SH-10
2109S-70
2109SLB-10

2110S-10
2110S-70

2113S-10

FEATURES

- Standard 0.01mm graduation dial gauges having an outer frame with an outside diameter of ø57mm. All types come with limit pins and an outer frame clamp.
- The outer clamp and lifting lever (optional) can be attached to either the right or left side. These parts can be easily installed and removed without tools.
- Secured adhesion between the outer frame and crystal as well as the use of an O-ring ensure countermeasures against water and oil permeation via the front face.
- The stem spindle is made of high-strength quench-hardened stainless steel which resists strenuous use.
- A carbide contact point is used.
- The grand gear uses stainless steel that is resistant to wear and deformation.
- Application of a hard coating on the surface of the crystal makes the gauge highly scratch- and chemical-resistant.
- A special alloy is used for the sector gears to provide improved wear resistance.
- The bearing part uses jeweled bearings, providing excellent indication sensitivity and durability.

2109S-10

2110S-10

2119S-10

Mitutoyo

Schockproof type | Waterproof type | Long stem type | Jewele bearing type | Double scale specing type

SPECIFICATIONS

Metric

Graduation	Order No. w/ lug	Order No. Flat-back	Range (range/rev)	Accuracy	Dial reading	Measuring force						
0.005mm	2124S-10	2124SB-10	5mm (0.5mm)	±12μm	0-50	1.5N or less	—	—	—	✔	—	—
0.001mm	2110S-10	2110SB-10	1mm (0.1mm)	±5μm	0-100	1.5N or less	✔	—	—	✔	✔	—
0.001mm	2110S-70	2110SB-70	1mm (0.1mm)	±5μm	0-100	2.0N or less	✔	✔	—	✔	✔	—
0.001mm	2109S-10	2109SB-10	1mm (0.2mm)	±5μm	0-100-0	1.5N or less	✔	—	—	✔	—	—
0.001mm	2109S-70	2109SB-70	1mm (0.2mm)	±5μm	0-100-0	2.0N or less	✔	✔	—	✔	—	—
0.001mm	2113S-10	2113SB-10	2mm (0.2mm)	±7μm	0-100-0	1.5N or less	✔	—	—	✔	—	—
0.001mm	2118S-10	2118SB-10	5mm (0.2mm)	±10μm	0-100-100	1.5N or less	—	—	—	✔	—	—
0.001mm	2119S-10	2119SB-10	5mm (0.2mm)	±10μm	0-100-0	1.5N or less	—	—	—	✔	—	—

2118S-10

2119S-10

2124S-10

DIMENSION

ISO/JIS Type

Unit: mm

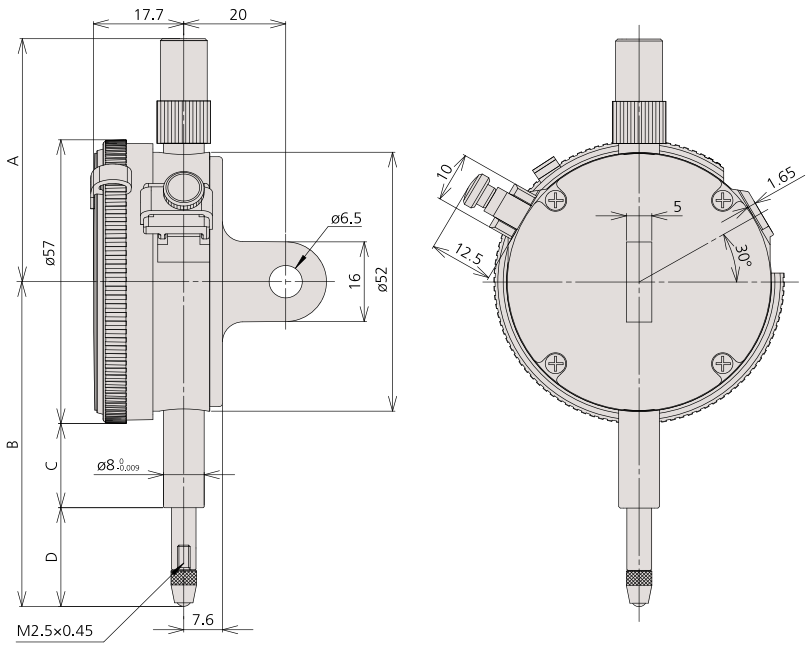

Order No.	A	B	C	D
2124S-10	48.8	60.3	16.9	14.9
2110S-10	48.8	66.5	16.9	21.1
2110S-70	48.8	67.5	12.3	26.7
2109S-10	48.8	60.5	16.9	15.1
2109S-70	48.8	65.3	12.3	24.5
2113S-10	48.8	61	16.9	15.6
2118S-10	48.8	60.3	16.9	14.9
2119S-10	48.8	60.3	16.9	14.9

Special Dial Indicator

SERIES 2

PROPRIETARY INSPECTION CERTIFICATE

Adjustable hand

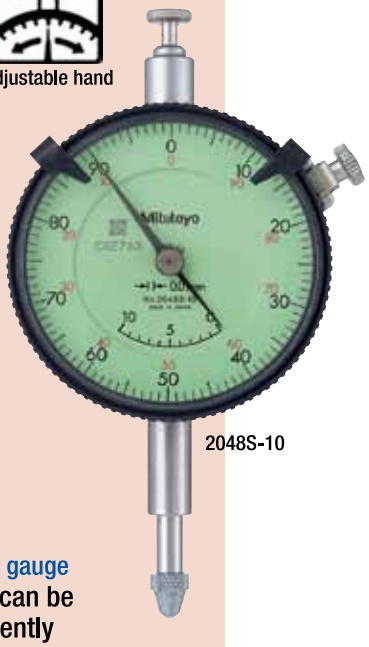

2048S-10

Peak hold

2046S-80

Double-face type

2940S

Adjustable hand dial gauge

The hand position can be adjusted independently of the vertical movement of the spindle by rotating the top knob.

Peak hold type dial gauge

A mechanism that stops the pointer and the spindle at the depressed position where the spindle is depressed makes the pointer stop and display the maximum value.

Double-face type dial gauge

The displacement of the spindle can be read from either the front or rear face.

SPECIFICATIONS

Metric

Graduation	Order No.		Range (range/rev)	Accuracy	Dial reading	Measuring force	Measuring force
	w/ lug	Flat-back					
0.01mm	2048S-10	2048SB-10	10mm (1mm)	±15μm	0-100	1.4N or less	Adjustable hand
0.01mm	2046S-80	2046SB-80	10mm (1mm)	±15μm	0-100	5.0N or less	Peak hold
0.01mm	2940S	—	10mm (1mm)	±15μm	0-100	3.0N or less	Double-face

DIMENSION

ISO/JIS Type

Unit: mm

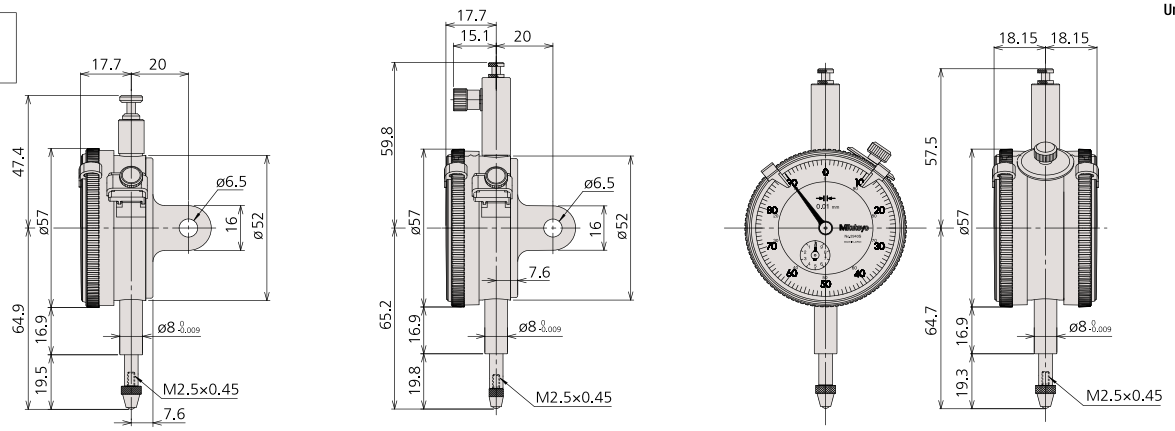

2048S-10 2046S-80 2940S

Mitutoyo

Dial Indicator

SERIES 2 — Standard One Revolution Type for Error-free Reading

Unlike many other dial indicators, the one-revolution dial indicator literally shows the entire spindle travel or range as one sweep of the hand, eliminating the possibility of reading errors due to miscounting the multiple revolutions. With one-revolution dial indicators, "within tolerance" and "out-of-tolerance" can never misinterpreted.

FEATURES

- An unique shock-proof mechanism is incorporated, providing improved immunity to shock due to sudden spindle retraction caused by high impact.
- The crystal is hard coated for durability and scratch resistance.
- Approximately 40% lighter than the conventional dial indicator.
- Provided with an improved resistance to shop floor contaminants such as water and dust.
- Due to the spindle bushing being offset from the stem, spindle movement will not be hindered or jammed when clamping along the stem.
- A pair of limit hands are provided for quick and easy tolerance judgment (GO/±NG).

2971

2972

2973

2929S

2900S-10

2990

2971

2972

2973

2928S

Mitutoyo

Schockproof type | Waterproof type | Dustproof type | Jewele bearing type

SPECIFICATIONS

Metric

Graduation	Order No. w/ lug	Order No. Flat-back	Range (range/full stroke)	Accuracy	Dial reading	Measuring force					—
0.1mm	2928S	2928SB	4mm / 10mm	±40µm	2-0-2	1.4N or less	✔	—	—	—	—
0.01mm	2929S	2929SB	0.8mm / 1mm	±9µm	40-0-40	1.4N or less	✔	—	—	—	—
0.01mm	2929S-60	2929SB-60	0.8mm / 1mm	±9µm	40-0-40	2.0N or less	✔	✔	—	—	—
0.01mm	2929S-62	2929SB-62	0.8mm / 1mm	±9µm	40-0-40	2.0N or less	✔	—	✔	—	—
0.01mm	2959S	2959SB	1.6mm / 2mm	±13µm	80-0-80	1.4N or less	✔	—	—	—	—
0.001mm	2900S-10	2900SB-10	0.08mm / 0.1mm	±3µm	40-0-40	1.4N or less	✔	—	—	✔	—
0.001mm	2900S-70	2900SB-70	0.08mm / 0.1mm	±3µm	40-0-40	2.0N or less	✔	✔	—	✔	—
0.001mm	2900S-72	2900SB-72	0.08mm / 0.1mm	±3µm	40-0-40	2.0N or less	✔	—	✔	✔	—
0.001mm	2901S-10	2901SB-10	0.16mm / 0.2mm	±4µm	80-0-80	1.4N or less	✔	—	—	✔	—
0.02mm	2973	—	1.6mm / 2mm	±16µm	80-0-80	1.4N or less	✔	—	✔	—	—
0.01mm	2971	—	0.5mm / 0.7.mm	±10µm	25-0-25	1.4N or less	✔	—	✔	—	—
0.01mm	2972	—	1mm / 1.4mm	±12µm	50-0-50	1.4N or less	✔	—	✔	—	—
0.01mm	2990*	—	0.1mm / 0.14mm	±6.5µm	50-0-50	1.5N or less	✔	—	—	✔	—
0.001mm	2960F*	—	1mm / 1.27mm	±14µm	50-0-50	1.4N or less	✔	—	—	—	—

2929S
2929S-60
2929S-62

2959S

2900S-10
2900S-70
2900S-72

2901S-10

DIMENSION

ISO/JIS Type

Unit: mm

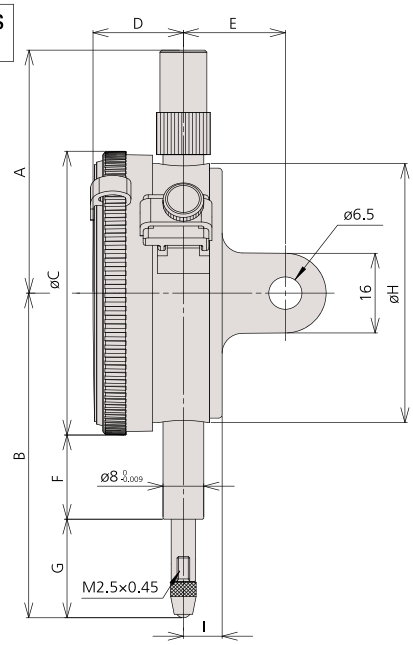

Order No.	A	B	C	D	E	F	G	H	I
2971	43.2	65.6	55.6	16.2	—	21	16.8	55	7.6
2972	43.2	66.0	55.6	16.2	—	21	17.2	55	7.6
2973	43.2	66.3	55.6	16.2	—	21	17.5	55	7.6
2929S	48.8	65.2	57	17.7	20	12.3	29.2	52	7.6
2929S-62	48.8	65.2	57	17.7	20	16.9	19.8	52	7.6
2929S-60	48.8	70	57	17.7	20	12.3	29.2	52	7.6
2959S	48.8	65.2	57	17.7	20	16.9	19.8	52	7.6
2900S-10	48.8	66	57	17.7	20	16.9	20.6	52	7.6
2900S-72	48.8	66	57	17.7	20	16.9	20.6	52	7.6
2900S-70	48.8	67	57	17.7	20	12.3	26.2	52	7.6
2901S-10	48.8	66.1	57	17.7	20	16.9	20.7	52	7.6
2928S	48.8	65.2	57	17.7	20	16.9	19.8	52	7.6

Mitutoyo

Dial Indicator

SERIES 2 — Long Stroke Type

2050S-60
2050S
2050S-19

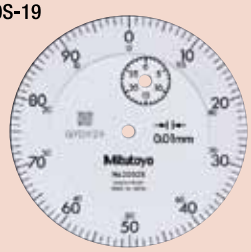

2052S
2052S-19

2330S-10

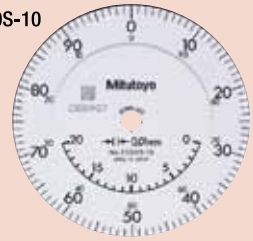

2320S-10

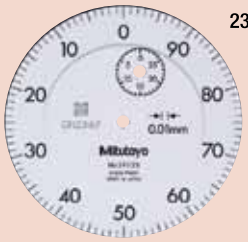

2952S

SPECIFICATIONS

Metric

Graduation	Order No.		Range (range/rev)	Accuracy	Dial reading	Measuring force						
	w/ lug	Flat-back										
0.01mm	2050S	2050SB	20mm (1mm)	±20μm	0-100	2.0N or less	—	—	✔	—	—	—
0.01mm	2050S-60	2050SB-60	20mm (1mm)	±20μm	0-100	2.5N or less	—	✔	—	—	—	—
0.01mm	2050S-19	2050SB-19	20mm (1mm)	±20μm	0-100	2.0N or less	✔	—	✔	✔	—	—
0.01mm	2320S-10	2320SB-10	20mm (1mm)	±20μm	0-100	2.0N or less	—	—	✔	✔	✔	—
0.01mm	2052S	2052SB	30mm (1mm)	±25μm	0-100	2.5N or less	—	—	✔	—	—	—
0.01mm	2052S-19	2052SB-19	30mm (1mm)	±25μm	0-100	2.5N or less	✔	—	✔	✔	—	—
0.01mm	2330S-10	2330SB-10	30mm (1mm)	±25μm	0-100	2.5N or less	—	—	✔	✔	✔	—
0.01mm	2952S	2952SB	30mm (1mm)	±25μm	100-0	2.5N or less	—	—	✔	—	—	✔

DIMENSION

ISO/JIS Type

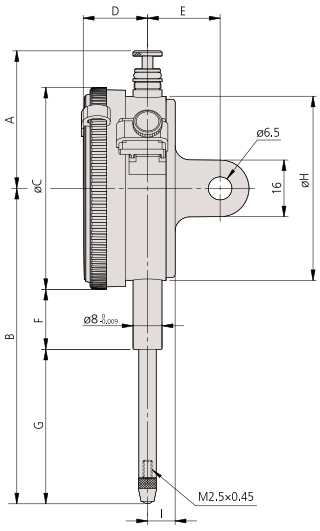

Unit: mm

Schockproof type
Waterproof type
Long stem type
Jewele bearing type
w/ coaxial revolution counter
Reverse reading type

Order No.	A	B	C	D	E	F	G	H	I
2050S	38.8	75.2	57	17.7	20	16.9	29.8	52	7.6
2050S-60	59.8	87.2	57	17.7	20	12.3	46.4	52	7.6
2050S-19	38.8	75.2	57	17.7	20	16.9	29.8	52	7.6
2320S-10	38.8	75.2	57	17.7	20	16.9	29.8	52	7.6
2052S	38.8	88.7	57	17.7	20	16.9	43.3	52	7.6
2052S-19	38.8	88.7	57	17.7	20	16.9	43.3	52	7.6
2330S-10	38.8	88.7	57	17.7	20	16.9	43.3	52	7.6
2952S	38.8	88.7	57	17.7	20	16.9	43.3	52	7.6

Dial Indicator

SERIES 3, 4 — Large Dial Face and Long Stroke Type

- Dial gauges with a large-diameter graduation face to ease reading.
- All types come with limit pins and an outer frame clamp as standard.

3046S

3047S

3050S

3052S-19

3058S-19

3060S-19

3062S-19

3109S-10

4046S

DIMENSION

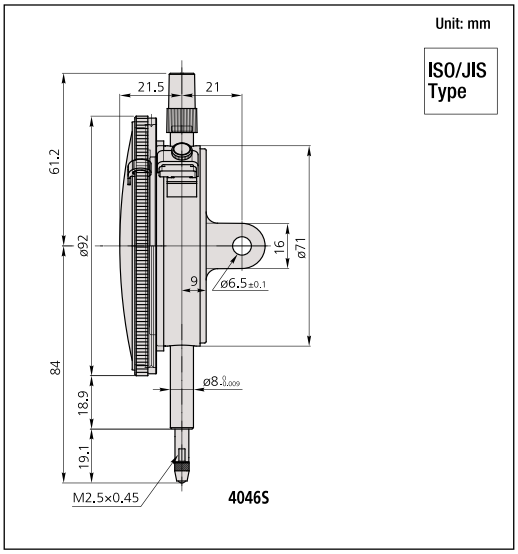

DIMENSION

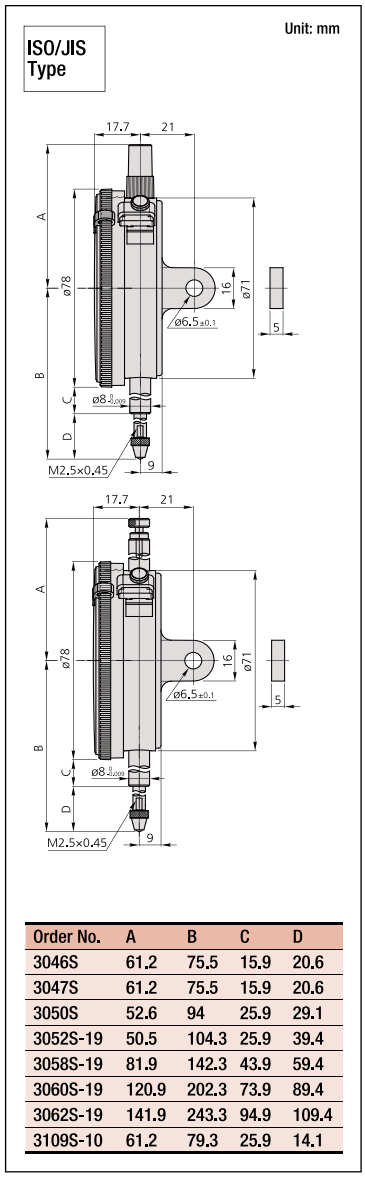

Order No.	A	B	C	D
3046S	61.2	75.5	15.9	20.6
3047S	61.2	75.5	15.9	20.6
3050S	52.6	94	25.9	29.1
3052S-19	50.5	104.3	25.9	39.4
3058S-19	81.9	142.3	43.9	59.4
3060S-19	120.9	202.3	73.9	89.4
3062S-19	141.9	243.3	94.9	109.4
3109S-10	61.2	79.3	25.9	14.1

Schockproof type | w/ damper at lowest rest point | Jewele bearing type | w/ coaxial revolution counter

SPECIFICATIONS

Metric

Graduation	Order No. w/ lug	Order No. Flat-back	Range (range/rev)	Accuracy	Dial reading	Measuring force					—	—
0.01mm	3046S	3046SB	10mm (1mm)	±15µm	0-100	1.4N or less	—	—	—	—	—	—
0.01mm	3047S	3047SB	10mm (1mm)	±15µm	0-50-0	1.4N or less	—	—	—	—	—	—
0.01mm	3050S	3050SB	20mm (1mm)	±20µm	0-100	2.0N or less	—	✔	—	—	—	—
0.01mm	3052S-19	3052SB-19	30mm (1mm)	±25µm	0-100	2.5N or less	✔	—	✔	✔	—	—
0.01mm	3058S-19	3058SB-19	50mm (1mm)	±35µm	0-100	3.0N or less	✔	—	✔	✔	—	—
0.01mm	3060S-19*	3060SB-19*	80mm (1mm)	±45µm	0-100	3.0N or less	✔	—	✔	✔	—	—
0.01mm	3062S-19*	3062SB-19*	100mm (1mm)	±50µm	0-100	3.2N or less	✔	—	✔	✔	—	—
0.001mm	3109S-10	3109SB-10	1mm (0.2mm)	±6µm	0-100-0	1.5N or less	✔	—	✔	—	—	—
0.01mm	4046S	4046SB	10mm (1mm)	±15µm	0-100	1.4N or less	—	—	—	—	—	—

*Use in a vertical position only.

Mitutoyo

Back Plunger Type Dial Indicator

SERIES 1 and 2

2960F

Mitutoyo's back plunger type dial indicators are built with the measuring spindles on the back of the units. This type of indicator offers the same precision and durability as all other Mitutoyo dial indicators, and operates very effectively with optional holding bars.

- Back plunger type dial gauges are suitable for mounting onto leveling machine tool tables or inspection jigs, and for use in small spaces where the graduations of standard dial gauges are difficult to see.
- Model No. 1960, which uses Mitutoyo's proprietary shock-proofing mechanism, has excellent durability and shock resistance.
- Model No. 2990 is back plunger type and allows 0.001mm readings.

1160

1960

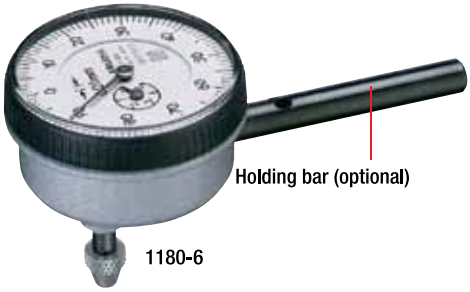

1180-6

One revolution type Schockproof type Jewele bearing type

2990

Optional Accessory

136567: Holding bar (ø6mm, L=81mm)
21AAA166: Holding bar (ø6mm, L=42mm)
136568: Holding bar (ø8mm, L=81mm)
21AAA168: Holding bar (ø8mm, L=42mm)

SPECIFICATIONS

Metric Series 1

Graduation	Order No.	Range (range/rev)	Accuracy	Dial reading	Measuring force				—	—	—
0.01mm	1960	1mm / 1.27mm*	±14µm	50-0-50	1.4N or less	✔	✔	—	—	—	—
0.01mm	1160	5mm (1mm)	±16µm	0-100	1.4N or less	—	—	—	—	—	—
0.01mm	1162	5mm (1mm)	±16µm	100-0	1.4N or less	—	—	✔	—	—	—
0.01mm	1180-6	5mm (1mm)	±16µm	0-100	1.4N or less	—	—	—	—	—	—
0.01mm	1180-7	5mm (1mm)	±16µm	0-100	1.4N or less	—	—	—	—	—	—
0.01mm	1180-8	5mm (1mm)	±16µm	0-100	1.4N or less	—	—	—	—	—	—

Metric Series 2

Graduation	Order No.	Range (range/full stroke)	Accuracy	Dial reading	Measuring force				—	—	—
0.01mm	2960F	1mm / 1.27”	±14µm	50-0-50	1.4N or less	✔	✔	—	—	—	—
0.001mm	2990	0.1mm / 0.14”	±6.5µm	50-0-50	1.5N or less	✔	✔	✔	—	—	—

DIMENSION

Unit: mm

ISO/JIS Type

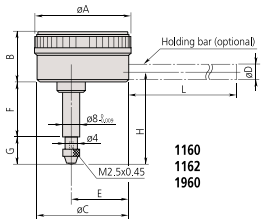

1160
1162
1960

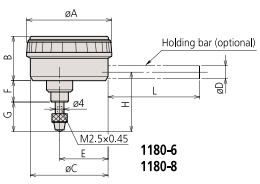

1180-6
1180-8

ISO/JIS Type

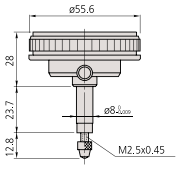

2960F

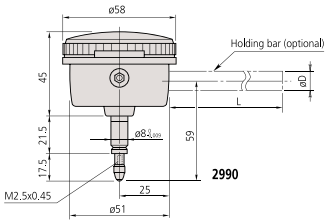

2990

Order No.	A	B	C	E	F	G	H
1160	39	21.5	35	22	25	13.8	43.3
1162	39	21.5	35	22	25	13.8	43.3
1180-6	39	21.5	35	22	9.5	13.8	27.8
1180-8	39	21.5	35	22	9.5	13.8	27.8
1960	39	21.5	35	22	28.7	12.8	46

Contact Point

Optional Accessory for Digimatic and Dial Indicators and Linear Gages

SPECIFICATIONS

Ball Points

Unit: mm

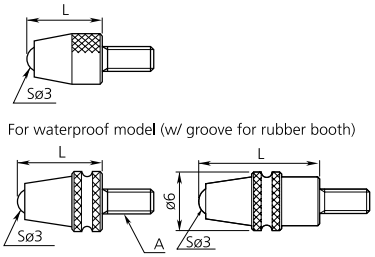

L	Material	Order No.	A
7.3	Carbide	901312	M2.5x0.45
	Plastic	901994	M2.5x0.45
	Ruby	120047	M2.5x0.45
8.3	Carbide	21AZA319	M2.5x0.45
8.3*	Carbide	902119	M2.5x0.45
12.1*	Carbide	21AZA320	M2.5x0.45
14	Carbide	21JAA225	M2.5x0.45
15	Carbide	120049	M2.5x0.45
	Ruby	120051	M2.5x0.45
17	Carbide	21JAA224	M2.5x0.45
19.3*	Carbide	21AZA321	M2.5x0.45
20	Carbide	137391	M2.5x0.45
	Ruby	137392	M2.5x0.45
22	Carbide	21JAA226	M2.5x0.45
25	Carbide	120053	M2.5x0.45
	Ruby	120055	M2.5x0.45
30	Carbide	21AAA252	M2.5x0.45
	Ruby	21AAA253	M2.5x0.45

*For waterproof dial indicators

Shell Type Points

Unit: mm

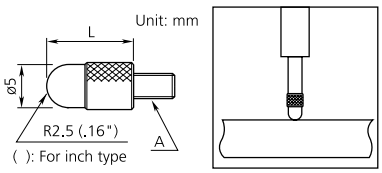

L	Order No.	A
5	101386	M2.5x0.45
10	101118	M2.5x0.45
15	137393	M2.5x0.45
20	101387	M2.5x0.45
25	101388	M2.5x0.45
30	21AAA254	M2.5x0.45

Ball Point

Unit: mm

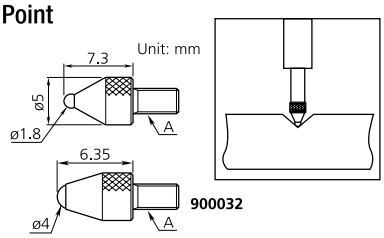

SøD	ød	Order No.	A
1mm, carbide	5mm	21AAA349	M2.5x0.45
1.5mm, carbide	5mm	21AAA350	M2.5x0.45
1.8mm, steel	5mm	101122	M2.5x0.45
2.5mm, carbide	5mm	21AAA351	M2.5x0.45
4mm, carbide	5mm	21AAA352	M2.5x0.45

Spherical Points

Unit: mm

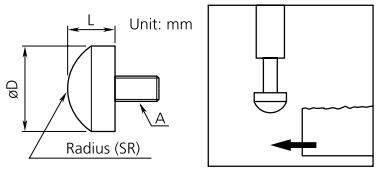

D	L	SR	Order No.	A
10	5	7	101119	M2.5x0.45

Spherical Points (Carbide)

Unit: mm

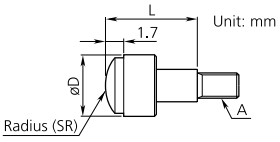

D	L	SR	Order No.	A
5.2	5	5	120058	M2.5x0.45
7.5	10	7	120059	M2.5x0.45
10.5	10	10	120060	M2.5x0.45

Conical Points

Unit: mm

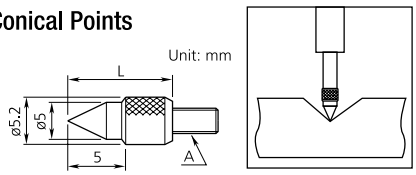

Tip angle	L	Order No.	A
60°	10	101120	M2.5x0.45

Unit: mm

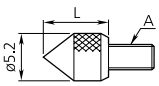

Tip angle	L	Order No.	A
90°	5	101385	M2.5x0.45

Conical Points (Carbide)

Unit: mm

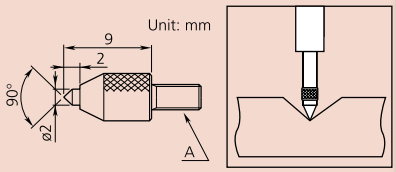

Order No.	A
120057	M2.5x0.45

Unit: mm

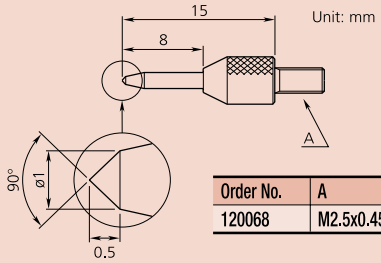

Order No.	A
120068	M2.5x0.45

Knife Edge Point (Carbide)

Unit: mm

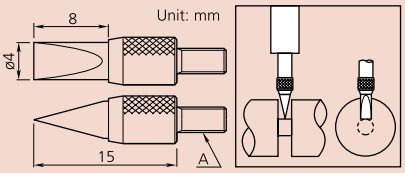

Order No.	A
120067	M2.5x0.45

Flat Points

Unit: mm

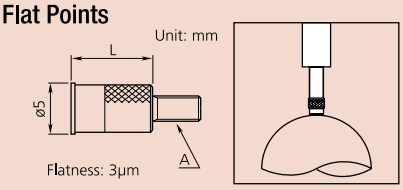

L	Order No.	A
8	131365	M2.5x0.45
10	21AAA340	M2.5x0.45

Unit: mm

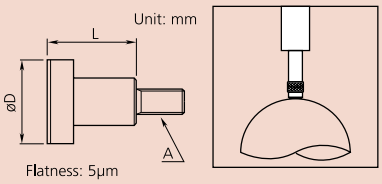

D	L	Order No.	A
10	10	101117	M2.5x0.45
15	10	21AAA341	M2.5x0.45
20	10	21AAA342	M2.5x0.45
25	10	21AAA343	M2.5x0.45
20	10	21AAA344	M2.5x0.45

Mitutoyo

Roller Points

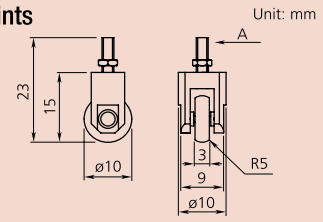

Order No.	A
901954	M2.5x0.45

Extension Rods

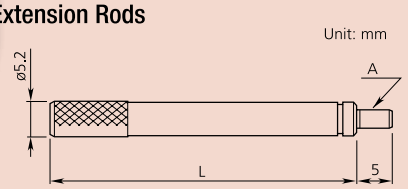

L	Order No.	A
10	303611	M2.5x0.45
15	21AAA259A	M2.5x0.45
20	303612	M2.5x0.45
25	21AAA259B	M2.5x0.45
30	303613	M2.5x0.45
35	21AAA259C	M2.5x0.45
40	21AAA259D	M2.5x0.45
45	21AAA259E	M2.5x0.45
50	21AAA259F	M2.5x0.45
55	21AAA259G	M2.5x0.45
60	304146	M2.5x0.45
65	21AAA259H	M2.5x0.45
70	21AAA259J	M2.5x0.45
75	21AAA259L	M2.5x0.45
80	21AAA259M	M2.5x0.45
90	304147	M2.5x0.45
100	303614	M2.5x0.45

Interchangeable Contact Point Set (M2.5x0.45)

Order No.	Components
7822	Flat Point (131365, ø5mm)
	Flat Point (101117, ø10mm)
	Needle Point (101121)
	Spherical Point (101119)
	Shell Type Point (101118)
	Shell Type Point (101387)

Flat Points (Carbide)

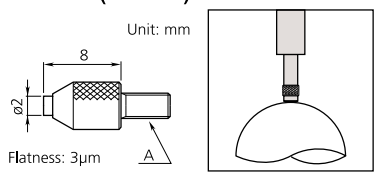

Order No.	A
120056	M2.5x0.45

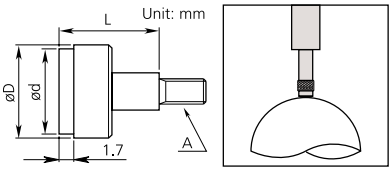

D	d	L	Order No.	A
5.2	4.3*	5	120041	M2.5x0.45
7	6.5*	10	120042	M2.5x0.45
10.5	9.5*	10	120043	M2.5x0.45
17	15**	10	21AAA345	M2.5x0.45
22	20**	10	21AAA346	M2.5x0.45
27	25**	10	21AAA347	M2.5x0.45
32	30**	10	21AAA348	M2.5x0.45

Flatness: *3μm, **5μm

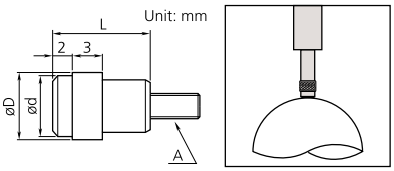

D	d	L	Order No.	A
7	6.4	10	137255	M2.5x0.45
9	8	10	137399	M2.5x0.45

Lever Points

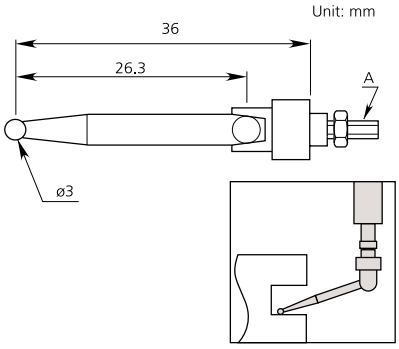

Order No.	A
900391	M2.5x0.45

Lever Points

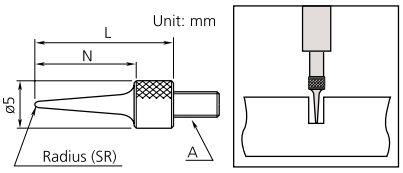

N	L	SR	Order No.	A
11	15	0.4	101121	M2.5x0.45
13	17	0.2	137413	M2.5x0.45
21	25	0.4	21AAA255	M2.5x0.45
31	35	0.4	21AAA256	M2.5x0.45

Needle Points (Carbide)

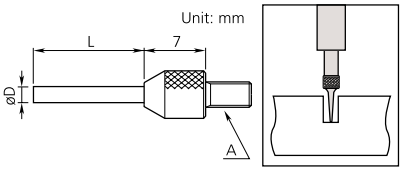

D	L	Order No.	A
0.45	3	120066	M2.5x0.45
0.45	5	21AAA329	M2.5x0.45
1	3	120065	M2.5x0.45
1	5	21AAA330	M2.5x0.45
1	8	21AAA331	M2.5x0.45
1	10	21AAA332	M2.5x0.45
1	20	21AAA333	M2.5x0.45
1	40	21AAA334	M2.5x0.45
1.5	5	21AAA335	M2.5x0.45
1.5	10	21AAA336	M2.5x0.45
1.5	13	120064	M2.5x0.45
1.5	20	21AAA337	M2.5x0.45
1.5	40	21AAA338	M2.5x0.45
2	8	137257	M2.5x0.45
2	18	21AAA257	M2.5x0.45
2	28	21AAA258	M2.5x0.45
2	40	21AAA339	M2.5x0.45

Blade Points (Carbide)

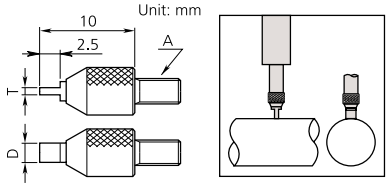

T	W	Order No.	A
0.4	2	120061	M2.5x0.45
0.6	2	120062	M2.5x0.45
1	4	120063	M2.5x0.45

Back

Optional Accessory for Digimatic and Dial Indicators

SPECIFICATIONS

Description		Order No.		
		Series 1 (ø41mm)	Series 2 (ø57mm)	Series 3, 4 (ø77, 91mm)
Flat Back		101211: a=2.2 136872: for water-proof type 191559: for 1911, 1913-10 137906: for 1003	101039: a=2.5 21AZB231: for water-proof of S type	100836: a=3.0
Lug-on-Center Back	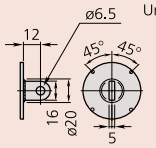	101210: metric type 101307: inch type 190561: for 1911, 1913-10 137905: for 1003	101040: metric type 101306: inch type 21AZB230: for water-proof of S type	100691: metric type 100797: inch type
Magnetic Back	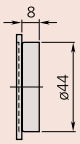	Special order	900928	900929
Back with Offset Lug	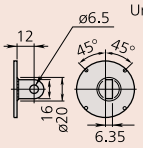	Special order	101167	100837
Back with Post	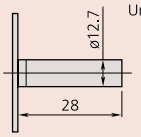	193172 Order-to-made	101169	100839
Back with Screw Mount	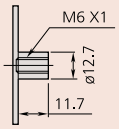	193173: M6x1, Order-to-made 193174: #1/4-28UNF, Order-to-made	136023: M6x1 193174: #1/4-28UNF	136024: M6x1 100840: #1/4-28UNF
Adjustable Back	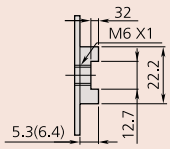	136025: M6x1 129721: #1/4-28UNF	136026: M6x1 101168: #1/4-28UNF)	136027: M6x1 100838: #1/4-28UNF
Back with Dovetail	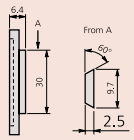	—	900008	Special order
Back with Adjustable Bracket	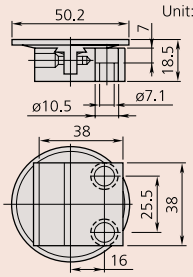	—	901963	—

There are two ways to support Digimatic and dial indicators; by either holding the stem or the lug on the back of the indicator. The back of the indicator may need to be replaced for special applications. A wide variety of backs are available for Mitutoyo Digimatic and dial indicators.

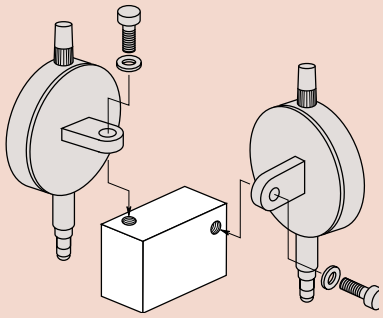

Mitutoyo

Spindle Lifting Lever and Cable

Optional Accessory for Digimatic and Dial Indicators

Spindle Lifting Cable

901975: with auto-stop function
540774: without auto-stop function
Lifting range: 10mm
Cable length: 300mm

Spindle Lifting Knob

137693
Applicable spindle diameter; 4.8mm

903424
Use for Series 2 dial indicators (up to 20mm/.8" range) and Series 3 and 4 dial indicators (up to 10mm/.4" range).

Application

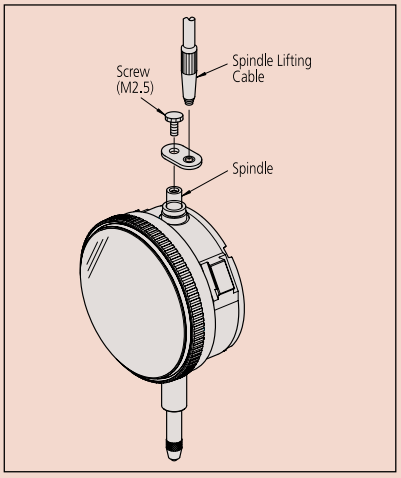

Spindle Lifting Lever

- The Spindle Lifting Lever is attached to the top end of the spindle for improved inspection efficiency when using a dial indicator mounted on a stand.

21BZA205
Use for Series 1 dial indicators.

21AZB149
Use for S type Series 2, 3, and 4 dial indicators (up to 10mm/.4").

21AZB150
Use for S type Series 2 and 3 dial indicators (from 10mm/.4" up to 20mm/.8").

Application

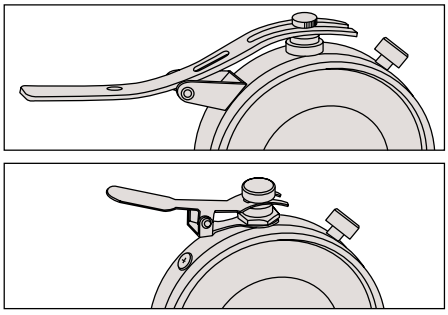

902011
Use for Series 2 dial indicators (up to 10mm/.4" range).

902100
Use for Series 2 dial indicators (up to 10mm/.4" range).

Color Spindle Cap

Optional Accessory for Digimatic and Dial Indicators

8 colors of spindle caps are available for dial indicators with a range of 10mm or less.

SPECIFICATIONS

Color	Order No. (normal)	Order No. (water-resistant)
Black	193051	193595
White	193051W	193595W
Red	193051R	193595R
Green	193051G	193595G
Blue	193051B	193595B
Yellow	193051Y	193595Y
Orange	193051D	193595D
Pink	193051P	193595P
Dark blue	193051S	193595S

Limit Sticker

Optional Accessory for Digimatic and Dial Indicators

FEATURES

- Stuck on the dial face or crystal of a Series 2 dial indicator (55.6mm or 57mm bezel dia.) to indicate tolerance limits.

136420: Red (10-sheet/set)

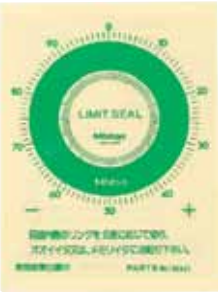

136421: Green (10-sheet/set)

136422: Yellow (10-sheet/set)

Dial Indicator Repair Tool Kit

Optional Accessory for Digimatic and Dial Indicators

Mitutoyo offers a tool set designed to let you perform simple repairs to your Mitutoyo dial indicator, and a device that lets you reset the indicator crystals.

7823

Set Configuration

901171:	Molykote (lubricant)
901172:	Lubricating oil
901173:	Screwdriver (Phillips)
901174:	Screwdriver (Phillips/flat blade)
129729:	Tweezers
901175:	Pin-vise
901176:	Brush
901177:	Brush
901177:	Brush
901178:	Hammer
129730:	Spindle rest
129731:	Pin rest
901179:	Nippers
901180:	Pliers
901181:	Hand remover
129732:	Pin remover
129733:	Punch
129734:	Bearing adjuster
129735:	Pinion rest
129736:	Reamer ø1
193702:	Reamer ø0.6
901182:	Case

Dial Indicator Crystal Setter

Optional Accessory for Digimatic and Dial Indicators

FEATURES

- Used for fitting a crystal on dial indicators, dial test indicators, and dial calipers.

7000

With 8 sizes of crystal setting pads

Mitutoyo

Dial Test Indicator

SERIES 513 — Universal Type

Set Configuration: Metric

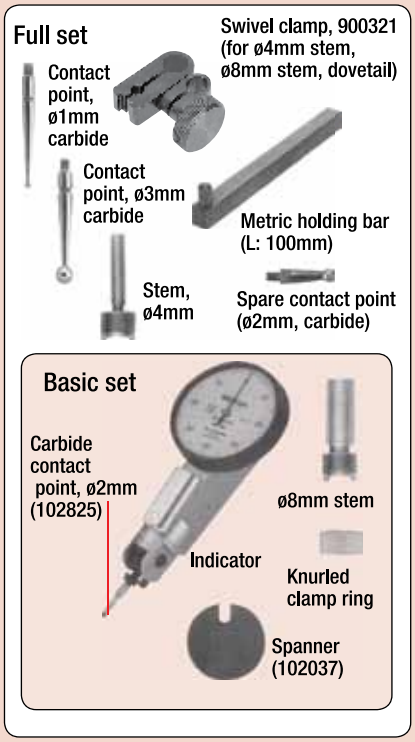

FEATURES

- Universal application to all directions. (Not only the direction of the measuring point, but also the direction of measurement itself can be adjusted 360 degrees without moving the indicator.)

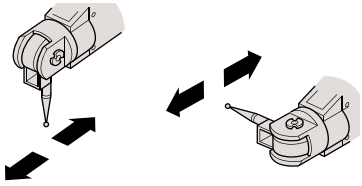

513-304GE

Jewele bearing type

SPECIFICATIONS

Metric

Graduation	Order No.		Range	Accuracy	Dial reading	Measuring force		—	—	—	—	—
	Basic set	Full set										
0.01mm	513-304GE	513-304GT	0.8mm	8μm	0-40-0	0.3N or less	✔	—	—	—	—	—

DIMENSION

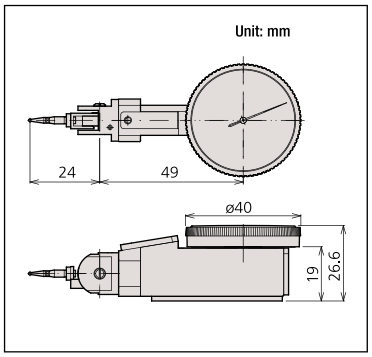

Optional Accessory

102824: Contact point, ø1mm ball (carbide)
102825: Contact point, ø2mm ball (carbide)
102826: Contact point, ø3mm ball (carbide)

Description of Icon

Icon	Description
	With revolution counter type
	Long contact point type
	Jeweled bearing type
	Double scale spacing type, easy-on-the-eyes
	Compact type
	Dustproof type
	Anti-magnetic type

Dial Test Indicator

SERIES 513 — Horizontal Type

FEATURES

- Performs easy and accurate measurement of narrow or recessed areas, plus inside and outside diameters that dial indicators cannot access.
- No-clutch structure for automatic reversal of measuring direction.
- Resistant to water and dust thanks to the one-piece bezel and "crystal" design with O-ring.
- The glare-free flat crystal face has a scratch-resistant coating.
- High-sensitivity and quick-response because of jeweled bearings.
- A carbide contact point is provided as standard.

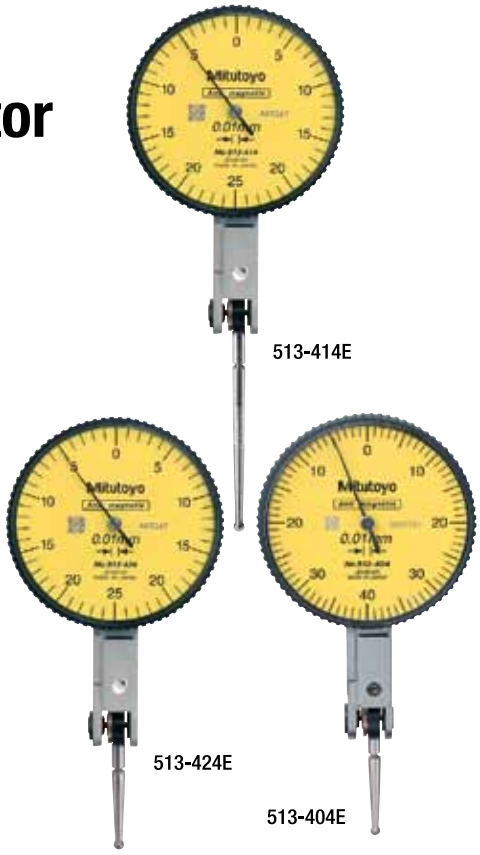

513-414E

513-424E

513-404E

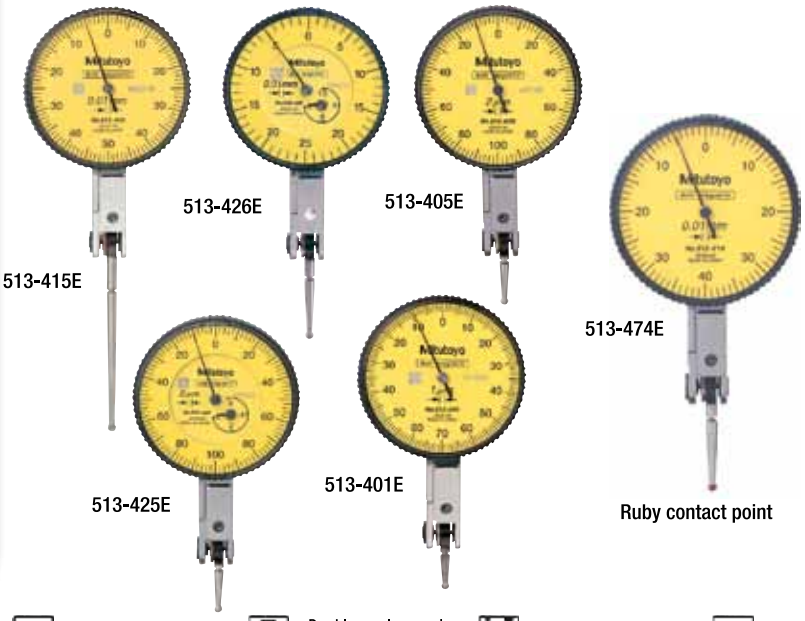

Anti-magnetic type | Double scale spacing type, easy-on-the-eyes | Long contact point type | Jeweled bearing type | Jewele bearing type | With revolution counter type

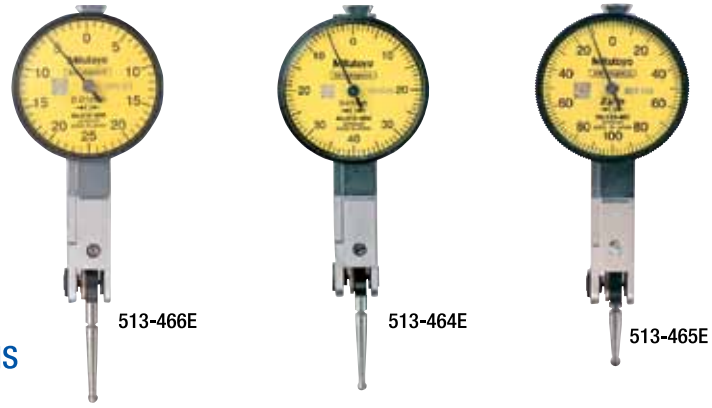

SPECIFICATIONS

Metric

Graduation	Order No.			Range	Accuracy	Dial reading	Measuring force						
	Basic set	Plus set	Full set										
0.01mm	513-424E	513-424A	513-424T	0.5mm	5µm	0-25-0	0.3N or less	✔	✔	—	✔	—	—
0.01mm	513-414E	513-414A	513-414T	0.5mm	10µm	0-25-0	0.2N or less	✔	✔	✔	✔	—	—
0.01mm	513-466E	—	—	0.5mm	5µm	0-25-0	0.3N or less	✔	✔	—	✔	✔	—
0.01mm	513-404E	513-404A	513-404T	0.8mm	8µm	0-40-0	0.3N or less	✔	—	—	✔	—	—
0.01mm	513-474E*	—	—	0.8mm	8µm	0-40-0	0.3N or less	✔	—	—	✔	—	—
0.01mm	513-464E	—	—	0.8mm	8µm	0-40-0	0.3N or less	✔	—	—	✔	✔	—
0.01mm	513-415E	513-415A	513-415T	1mm	10µm	0-50-0	0.2N or less	✔	—	✔	✔	—	—
0.01mm	513-426E	513-426A		1.5mm	8µm	0-25-0	0.4N or less	✔	✔	—	✔	—	✔
0.002mm	513-405E	513-405A	513-405T	0.2mm	3µm	0-100-0	0.3N or less	✔	—	—	✔	—	—
0.002mm	513-465E	—	—	0.2mm	3µm	0-100-0	0.3N or less	✔	—	—	✔	✔	—
0.002mm	513-425E	513-425A	—	0.6mm	6µm	0-100-0	0.4N or less	✔	—	—	✔	—	✔
0.001mm	513-401E	—	—	0.14mm	3µm	0-70-0	0.3N or less	✔	—	—	✔	—	—

*provided with a ø2mm ruby contact point as a substitute for ø2mm carbide contact point.

Metric/inch

Graduation	Order No.			Range	Accuracy	Dial reading	Measuring force			—	—	—	—
	Basic set	Plus set	Full set										
0.002mm, .0001"	513-409	—	513-409T	0.2mm, .0075"	3µm	0-10-0, 0-38-0	0.3N or less	✔	✔	—	—	—	—

Unit: mm

Order No.	L	D
513-424E	22.3	ø40
513-404E	20.9	ø40
513-415E	44.5	ø40
513-426E	22.3	ø40
513-405E	14.7	ø40
513-425E	14.7	ø40

Unit: mm

Order No.	L	D
513-401E	12.8	ø40
513-466E	22.3	ø28
513-464E	20.9	ø28
513-465E	14.7	ø28
513-414E	36.8	ø40
513-409	14.7	ø40

Mitutoyo

Special Set: No. 513-908 (mm)
513-404E: Dial test indicator
7014: Mini magnetic stand

No. 513-907 (inch)
513-402: Dial test indicator
7014: Mini magnetic stand

Set Configuration: Metric and Metric/Inch

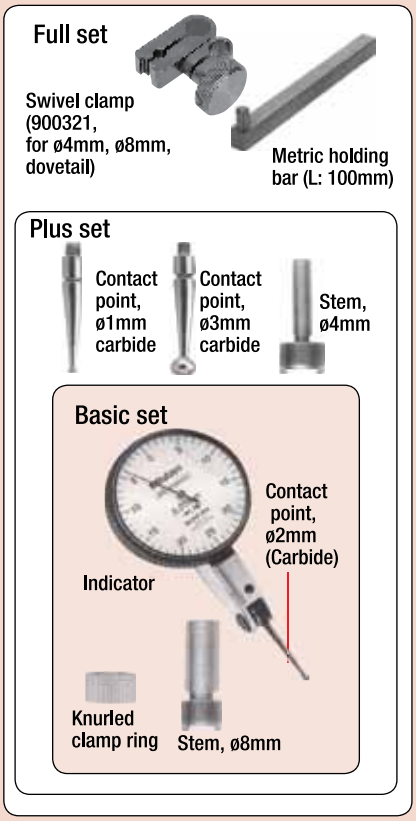

DIMENSION

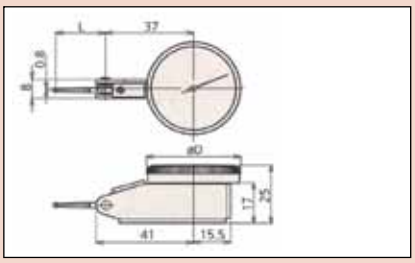

Mitutoyo

Dial Test Indicator

SERIES 513 — Horizontal (20 Tilted Face), Vertical, and Parallel Types

PROPRIETARY INSPECTION CERTIFICATE

513-444E

513-445E

513-454E
513-284GE

513-455E

FEATURES

- Specially designed for easy viewing

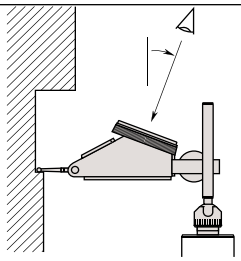

- The dial face obliquely faces upward, allowing users to read the graduations from the user's side. It is convenient when measuring on the side of a large workpiece and the workbench is high.

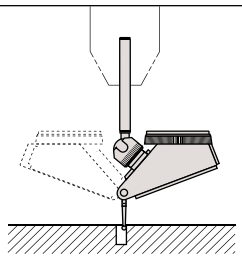

- Using the universal holder allows easy hole centering. The dial face always faces upward when the indicator is rotated, which makes reading easy.

Anti-magnetic type | With revolution counter type | Jeweled bearing type | Long contact point type

Set Configuration: Metric

Full set

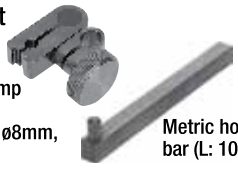

Swivel clamp (900321, for ø4mm, ø8mm, dovetail)

Metric holding bar (L: 100mm)

Plus set

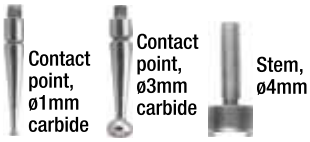

Contact point, ø1mm carbide

Contact point, ø3mm carbide

Stem, ø4mm

Basic set

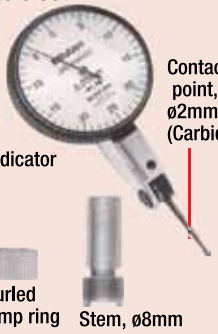

Contact point, ø2mm (Carbide)

Indicator

Knurled clamp ring

Stem, ø8mm

SPECIFICATIONS

Metric Horizontal (20° tilted face) type

Graduation	Order No.			Range	Accuracy	Dial reading	Measuring force				—	—	—
	Basic set	Plus set	Full set										
0.01mm	513-444E	513-444A	513-444T	1.6mm	10µm	0-40-0	0.3N or less	✔	✔	✔	—	—	—
0.002mm	513-445E	513-445A	513-445T	0.4mm	5µm	0-100-0	0.3N or less	✔	✔	✔	—	—	—

Metric Vertical type

Graduation	Order No.			Range	Accuracy	Dial reading	Measuring force			—	—	—	—
	Basic set	Plus set	Full set										
0.01mm	513-454E	513-454A	513-454T	0.8mm	8µm	0-40-0	0.3N or less	✔	✔	—	—	—	—
0.002mm	513-455E	513-455A	513-455T	0.2mm	3µm	0-100-0	0.3N or less	✔	✔	—	—	—	—

Metric Parallel type

Graduation	Order No.			Range	Accuracy	Dial reading	Measuring force		—	—	—	—	—
	Basic set	Plus set	Full set										
0.01mm	513-284GE	513-284GA	513-284GT	0.8mm	8µm	0-40-0	0.3N or less	✔	—	—	—	—	—

Mitutoyo

DIMENSION

Horizontal (20° Tilted Face) Type

unit: mm

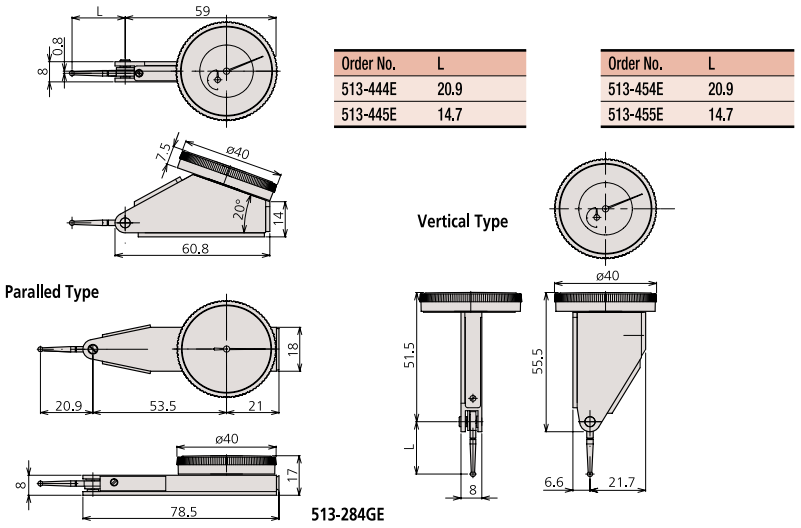

Order No.	L
513-444E	20.9
513-445E	14.7

Order No.	L
513-454E	20.9
513-455E	14.7

Pocket Type Dial Test Indicator

SERIES 513

FEATURES

- Jeweled bearings assure higher sensitivity and accuracy.
- Reversible measuring direction.
- Two holding bars are supplied. (Full sets only.)
- Fully adjustable bezel/dial face.
- Contact point is adjustable within 220 °.
- Bezel is sealed with on O-ring to keep out water / oil.

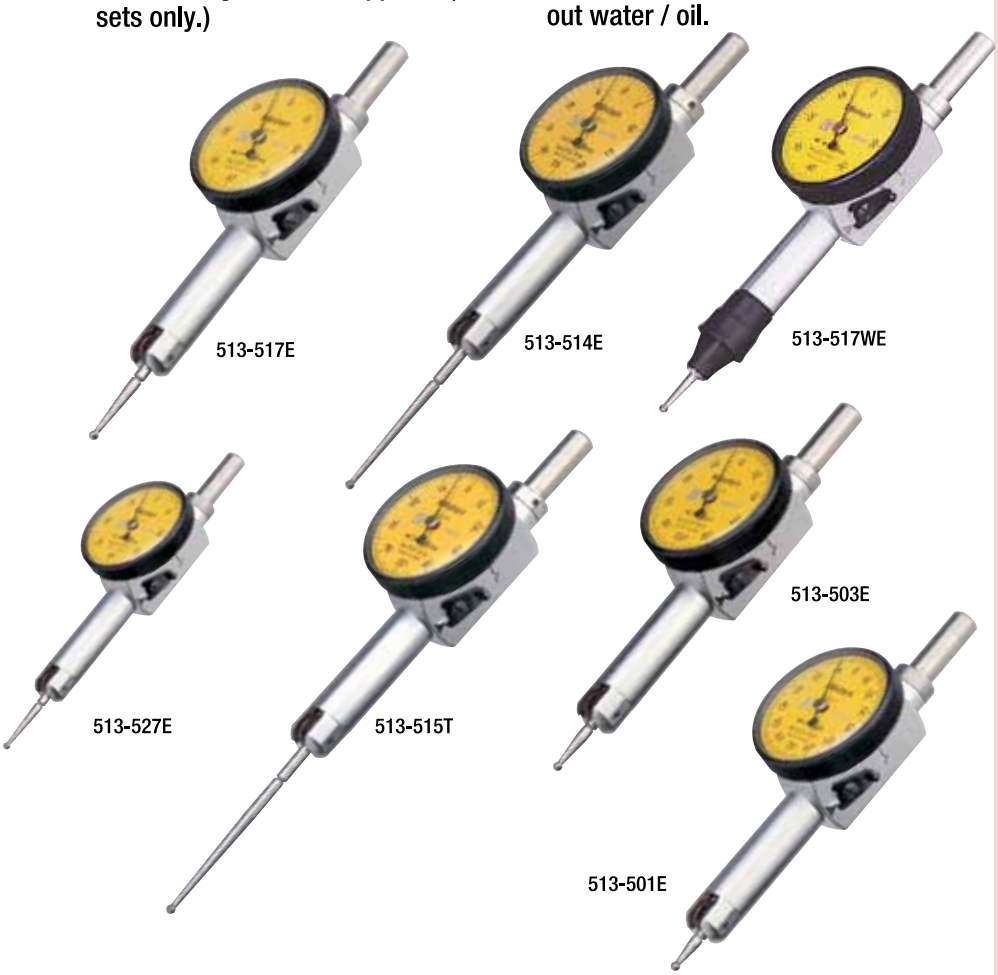

513-514E

513-517E
513-517WE
513-527E

513-515T

513-503E

513-501E

Long contact point type | Jeweled bearing type | Dustproof type | Compact type

Set Configuration: Metric

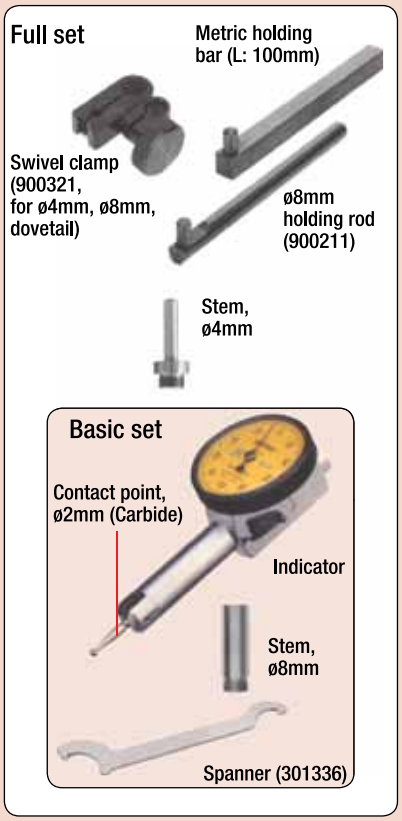

SPECIFICATIONS

Metric

Graduation	Order No. Basic set	Order No. Full set	Range	Accuracy	Dial reading	Measuring force	Long contact point type	Jeweled bearing type	Compact type	Dustproof type	—	—
0.01mm	513-514E	513-514T	0.5mm	10µm	0-25-0	0.3N or less	✔	✔	—	—	—	—
0.01mm	514-517E	513-517T	0.8mm	8µm	0-40-0	0.3N or less	—	✔	—	—	—	—
0.01mm	513-517WE	513-517WT	0.8mm	8µm	0-40-0	0.3N or less	—	✔	✔	—	—	—
0.01mm	513-527E	513-527T	0.8mm	8µm	0-40-0	0.3N or less	—	✔	—	✔	—	—
0.01mm	—	513-515T	1mm	10µm	0-50-0	0.3N or less	✔	✔	—	—	—	—
0.002mm	513-503E	513-503T	0.2mm	3µm	0-100-0	0.3N or less	—	✔	—	—	—	—
0.001mm	513-501E	513-501T	0.14mm	3µm	0-70-0	0.4N or less	—	✔	—	—	—	—

DIMENSION

unit: mm

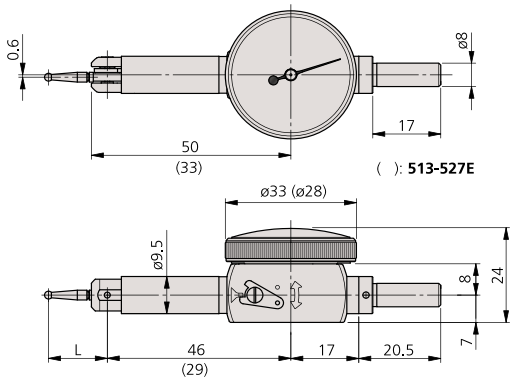

Order No.	L
513-514E	36.8
513-517E	20.9
513-515E	44.5
513-503E	14.7
513-501E	12
513-517WE	20.9
513-527E	14.7

For the model 513-517WE, use the indicator with measuring rang of ±30°

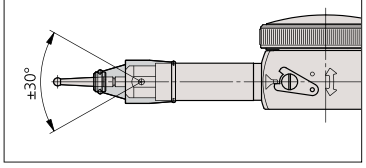

Contact Point, Stem and Clamp Holder

Optional Accessory for Dial Test Indicator

Contact Points (for Metric Model Only*)

* Except for universal type dial test indicator (513-304G).

- Use a contact point with the proper length for accurate measurement.

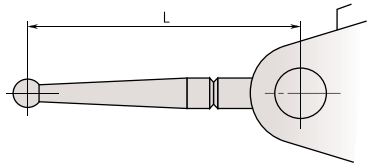

ø0.5mm ball

190547 (L=14.7mm)
190549 (L=20.9mm)
190654 (L=22.3mm)
190656 (L=44.5mm)

ø0.7mm ball

190548 (L=14.7mm)
190550 (L=20.9mm)
190653 (L=22.3mm)
190655 (L=44.5mm)

Swivel Clamps

- Can be used with Holding Bars.

For ø4mm stem, ø8mm stem, and dovetail

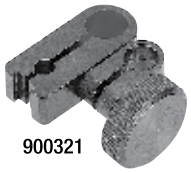

900321

Holding Bars

9 x 9mm

953638 (Length: 50mm)
900209 (Length: 100mm)

ø8mm

900211 (Length: 115mm)

Universal Holder

- Allows the indicator to be set at a desired position.

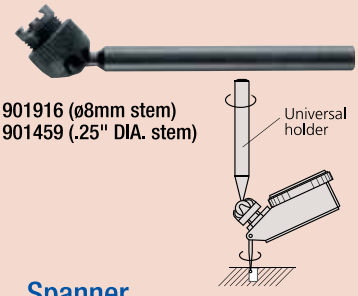

901916 (ø8mm stem)
901459 (.25" DIA. stem)

Spanner

102037

ø3mm ball (Carbide)

Mitutoyo

ø1mm ball (Carbide)

21CZA044 (L=12.8mm)
103017 (L=14.7mm)
103013 (L=20.9mm)
137558 (L=22.3mm)
137746 (L=36.8mm)
136235 (L=44.5mm)

ø2mm ball (Carbide)

21CZA036 (L=12.8mm)
103010 (L=14.7mm)
103006 (L=20.9mm)
137557 (L=22.3mm)
129949 (L=36.8mm)
136013 (L=44.5mm)

ø3mm ball (Carbide)

21CZA045 (L=12.8mm)
103018 (L=14.7mm)
103014 (L=20.9mm)
137559 (L=22.3mm)
137747 (L=36.8mm)
136236 (L=44.5mm)

Stems with Knurled Clamp Ring

ø4mm
(.157" DIA.)

902802

ø8mm

902804

Centering Holder

- Allows large diameter cylinders or holes to be centered.

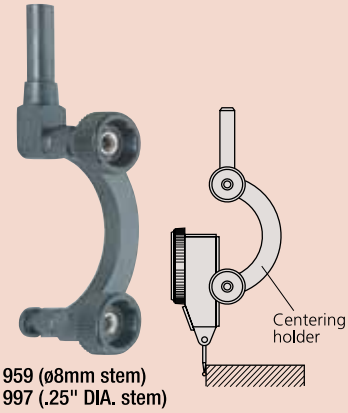

901959 (ø8mm stem)
901997 (.25" DIA. stem)

Contact Point, Stem and Clamp Holder

Optional Accessory for Pocket Type Dial Test Indicator

Contact Points (for Metric Model Only)

- Use a contact point with the proper length for accurate measurement.

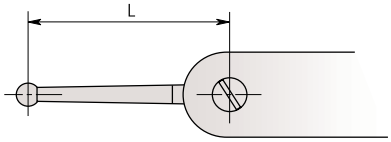

Swivel Clamps

- Can be used with Holding Bars.

For ø4mm stem
and ø8mm stem, and
dovetail

900321

ø0.5mm ball

190547 (L=14.7mm)
190549 (L=20.9mm)
190656 (L=44.5mm)

ø0.7mm ball

190548 (L=14.7mm)
190550 (L=20.9mm)
190655 (L=44.5mm)

ø1mm ball (Carbide)

136756 (L=12.1mm)
103017 (L=14.7mm)
103013 (L=20.9mm)
136235 (L=44.5mm)

ø2mm ball (Carbide)

136104 (L=12.1mm)
103010 (L=14.7mm)
103006 (L=20.9mm)
136013 (L=44.5mm)

ø3mm ball (Carbide)

136758 (L=12.1mm)
103018 (L=14.7mm)
103014 (L=20.9mm)
136236 (L=44.5mm)

Holding Bars

9 x 9mm

953638 (Length: 50mm)
900209 (Length: 100mm)

ø8mm

900211 (Length: 115mm)

Spanner

301336

901917 (ø8mm stem)

Universal Holder

- Since the Dial Test Indicator can be swiveled to a desired angle, the holder is useful for centering workpieces and installing workpieces on a milling machine.

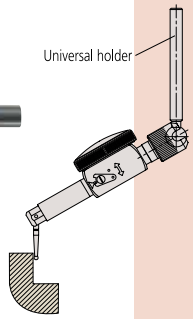

Stems

ø4mm (.157" DIA.)

102389

ø8mm

102822

UDT-2 Dial Gaage Tester

SERIES 547, 7

Optional Accessory
951438: Stand for bore gage inspection

The UDT-2 Dial Gaage Tester consists of a specially designed 25mm micrometer head, eith a large disc, and rigid holding fixtures. With graduations in 0.001 mm on the micrometer head the UDT-2 is highly recommended to calibrate 1mm, 5mm, 10mm, and 20mm range, 0.01mm reading, dial indicators and dial test indicators.

FEATURES

- Clamping stem diameter-170-102m-2 : 6mm and 8mm,
- With the optional stand (951498), inspection of Dial Bore Gages becomes possible to perfrom.

170-102M-2

SPECIFICATIONS

Metric

Range	Order No.	Gradution	Accuracy
0 - 25mm	170-102M-2	0.001mm	±1μm

Calibration Tester

SERIES 521

The Calibration Tester is pecially designed to calibrate measuring accuracy of short range dial induca-tors, dial test in dicators, and other electronic comparison gage head

FEATURES

- Universal bracket accepts any dial indicator, dial tes indicator, lever head of Mu-Checker without any additional accessory.
- Clamping capacity : Ø4mm - Ø10mm
- Dula color-indexed directional graduations to facilitate measurements.

521-103

Calibrating test indicator

SPECIFICATIONS

Metric

Range	Order No.	Gradution	Accuracy
0 - 1mm	521-103	0.0002mm	±0.2μm
0 - 5mm	521-105	0.001mm	±0.8μm

Mitutoyo

Dial Caliper Gage

SERIES 209 — Internal Measurement Type

These Dial Caliper Gages are used only as comparison gages, and should be used along with a Setting Ring or a micrometer. The caliper is spring loaded and makes point contact at constant measuring pressure.

209-155

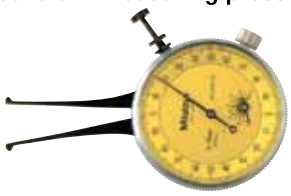

209-125

DIMENSION

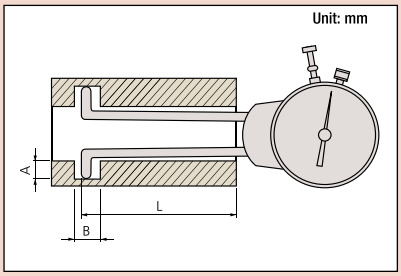

SPECIFICATIONS

Metric

Range	Order No.	Graduation	Dial face	Accuracy	Measuring force	Dimension [L / A (max) / B (min)]		
6 - 18mm	209-125	0.01mm	0-100-100	±40μm	1.2N or less	40mm	1.0mm	2.5mm
10 - 22mm	209-126	0.01mm	0-100-100	±40μm	1.2N or less	40mm	2.0mm	2.5mm
20 - 32mm	209-127	0.01mm	0-100-100	±40μm	1.2N or less	40mm	4.2mm	2.5mm
5 - 15mm	209-155	0.01mm	0-100	±25μm	1.2N or less	30mm	2.0mm	0.7mm
10 - 20mm	209-156	0.01mm	0-100	±25μm	1.2N or less	30mm	5.0mm	0.7mm
10 - 30mm	209-175	0.01mm	0-100-100	±25μm	1.2N or less	65mm	5.2mm	0.7mm
20 - 40mm	209-176	0.01mm	0-100-100	±25μm	1.2N or less	65mm	9.5mm	0.7mm

209-650

209-608

209-609

209-884

209-896

DIMENSION

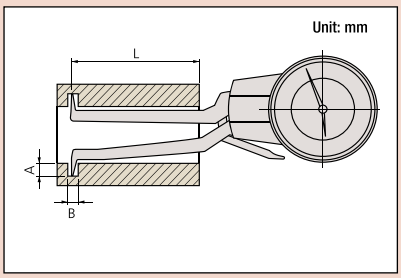

SPECIFICATIONS

Metric

Range	Order No.	Graduation	Accuracy	Measuring force	Contact point	Dimension [L / A (max) / B (min)]		
2.5 - 7.5mm	209-650	0.005mm	±15μm	1.7N or less	R0.1mm	12.4mm	0.7mm	0.6mm
5 - 10mm	209-651	0.005mm	±15μm	1.7N or less	ø0.6mm	27mm	2.3mm	1.9mm
5 - 15mm	209-652	0.01mm	±20μm	1.7N or less	ø0.6mm	23mm	2.3mm	1.7mm
10 - 20mm	209-653	0.01mm	±20μm	1.7N or less	ø1.0mm	60.6mm	4.5mm	1.8mm
10 - 30mm	209-608	0.01mm	±30μm	1.5N or less	ø1.0mm	80mm	5.0mm	1.7mm
20 - 30mm	209-654	0.01mm	±20μm	1.7N or less	ø1.0mm	60.6mm	4.5mm	2.0mm
20 - 40mm	209-609	0.01mm	±30μm	1.5N or less	ø1.0mm	80mm	6.5mm	2.3mm
30 - 40mm	209-655	0.01mm	±20μm	1.7N or less	ø1.0mm	60.6mm	4.5mm	2.0mm
30 - 50mm	209-600	0.01mm	±30μm	1.5N or less	ø1.0mm	80mm	6.5mm	2.5mm
40 - 50mm	209-656	0.01mm	±20μm	1.7N or less	ø1.0mm	60.6mm	4.5mm	1.8mm
40 - 60mm	209-884	0.01mm	±30μm	1.5N or less	ø1.0mm	80mm	9.0mm	2.3mm
50 - 70mm	209-885	0.01mm	±30μm	1.5N or less	ø1.0mm	80mm	8.0mm	3.7mm
60 - 80mm	209-886	0.01mm	±30μm	1.5N or less	ø1.0mm	80mm	8.0mm	3.7mm
70 - 90mm	209-887	0.01mm	±30μm	1.5N or less	ø1.0mm	80mm	8.0mm	3.7mm
80 - 100mm	209-888	0.01mm	±30μm	1.5N or less	ø1.0mm	80mm	8.0mm	3.7mm
15 - 65mm	209-896	0.05mm	±50μm	2.0N or less	ø1.5mm	175mm	5.0mm	2.1mm
40 - 90mm	209-897	0.05mm	±50μm	2.0N or less	ø2.0mm	175mm	10.0mm	3.8mm
70 - 120mm	209-898	0.05mm	±50μm	2.0N or less	ø2.0mm	175mm	8.0mm	3.8mm

Dial Caliper Gage

SERIES 209 — External Measurement Type

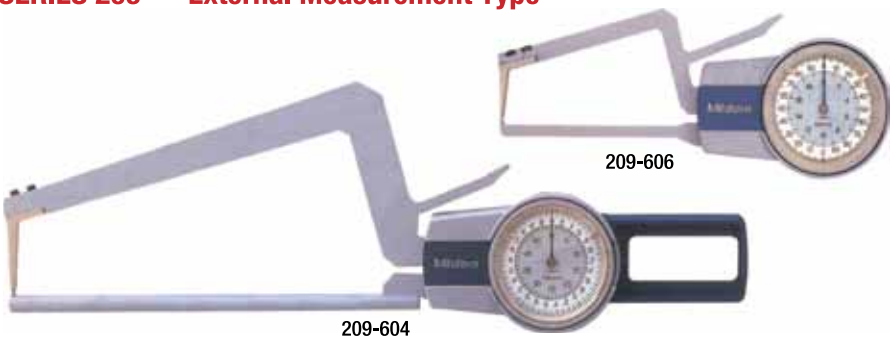

DIMENSION

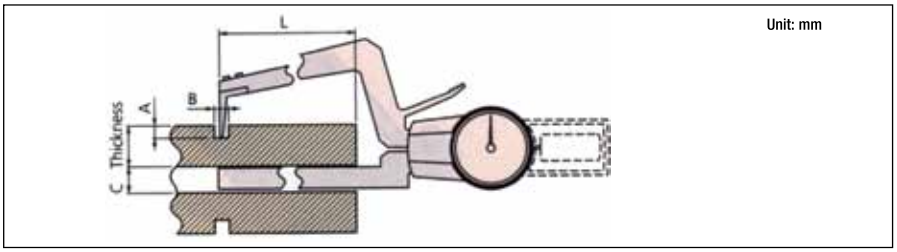

DIMENSION

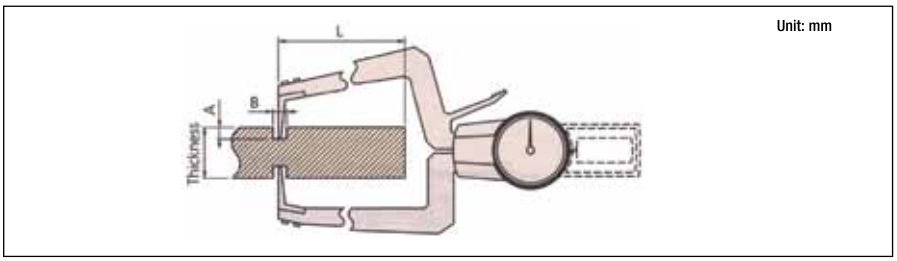

SPECIFICATIONS

Metric

Range	Order No.	Graduation	Accuracy	Measuring force	Contact point	Dimension [L / A (max) / B (min) / C (min)]			
0 - 10mm	209-660	0.01mm	±20µm	1.3N or less	No. 1	60.5mm	7mm	2mm	—
0 - 10mm	209-661	0.01mm	±20µm	1.3N or less	No. 4	60.5mm	7mm	2mm	3mm
0 - 10mm	209-662	0.01mm	±20µm	1.3N or less	No. 3	60.5mm	7mm	2mm	3mm
0 - 20mm	209-605	0.01mm	±30µm	1.5N or less	No. 1	80mm	10mm	5mm	—
0 - 20mm	209-601	0.01mm	±30µm	1.5N or less	No. 2	80mm	10mm	5mm	—
0 - 20mm	209-606	0.01mm	±30µm	1.5N or less	No. 3	80mm	10mm	5mm	10mm
0 - 20mm	209-607	0.01mm	±30µm	1.5N or less	No. 4	80mm	10mm	5mm	10mm
0 - 50mm	209-610	0.05mm	±50µm	1.8N or less	No. 1	170mm	20mm	7mm	—
0 - 50mm	209-602	0.05mm	±50µm	1.8N or less	No. 2	170mm	20mm	7mm	—
0 - 50mm	209-611	0.05mm	±50µm	1.8N or less	No. 5	170mm	20mm	7mm	12mm
0 - 50mm	209-604	0.05mm	±50µm	1.8N or less	No. 6	170mm	20mm	7mm	12mm

Application

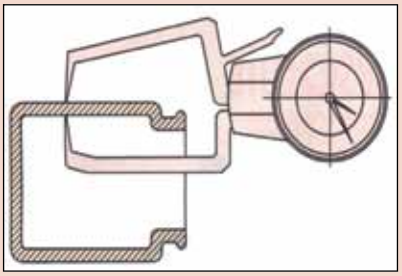

Type of Contact Points

Upper / Lower contact point
209-660:R0.4 / R0.4
209-605:R0.5 / R0.5
209-610:R0.75 / R0.75

No. 1

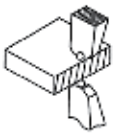

Upper / Lower contact point
209-602:ø2.0 / ø2.0 ball
209-601:ø1.5 / ø1.5 ball

No. 2

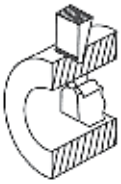

Upper / Lower contact point
209-606:R0.5 / ø1.5 ball
209-662:R0.4 / ø1.5 carbide ball

No. 3

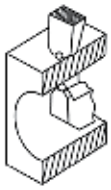

Upper / Lower contact point
209-607:ø1.5 / ø1.5 ball
209-661:ø1.5 / ø1.5 carbide ball

No. 4

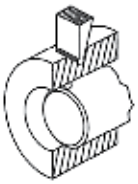

Upper / Lower contact point
209-611:R0.75 / ø2 ball

No. 5

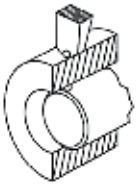

Upper / Lower contact point
209-604:ø2 / ø2.5 ball

No. 6

Mitutoyo

Dial Tension Gage

SERIES 546

Application

Measuring contact force of relay

FEATURES

- Can measure dynamic tension in Newton (N) units.
- Dial Tension Gages are widely used to determine the contact force of other measuring instruments as well as that of electrical relays, micro-switches, valves and precision springs.
- Convenient peak-hold type gages are also available.

546-112
Standard type

546-119
Standard type

546-137
Peak hold type

DIMENSION

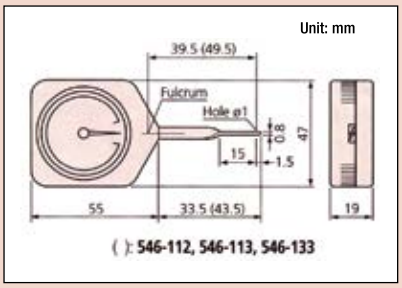

SPECIFICATIONS

Standard

Minimum reading	Order No.	Range
2mN	546-112	6mN - 50mN
5mN	546-113	10mN - 100mN
10mN	546-114	30mN - 300mN
0.02N	546-115	0.06N - 0.5N
0.05N	546-116	0.1N - 1N
0.05N	546-117	0.15N - 1.5N
0.1N	546-118	0.3N - 3N
0.2N	546-119	0.6N - 5N

Peak hold

Graduation	Order No.	Range
5mN	546-133	10mN - 100mN
10mN	546-134	30mN - 300mN
0.02N	546-135	0.06N - 0.5N
0.05N	546-136	0.1N - 1N
0.05N	546-137	0.15N - 1.5N
0.1N	546-138	0.3N - 3N
0.2N	546-139	0.6N - 5N

V-Block Set

SERIES 181

FEATURES

- Two V-blocks per set.
- Magnetic type is available. (The magnetic type V-block is not provided with a workpiece clamp.)

DIMENSION

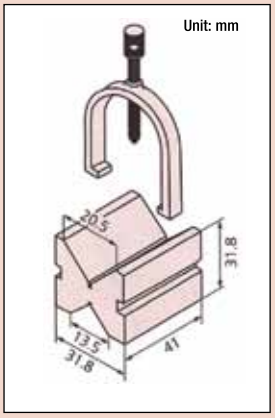

SPECIFICATIONS

Metric

Max. workpiece dia.	Order No.	Remarks
25mm	181-902	With clamp

Inch

Max. workpiece dia.	Order No.	Remarks
1”	181-901	With clamp

Magnetic Stand

SERIES 7

Mitutoyo's Magnetic Stands accept all dial indicators and dial test indicators. The ON-OFF switch offers instant mounting and dismounting without any adverse effect to the indicators or workpiece surface.

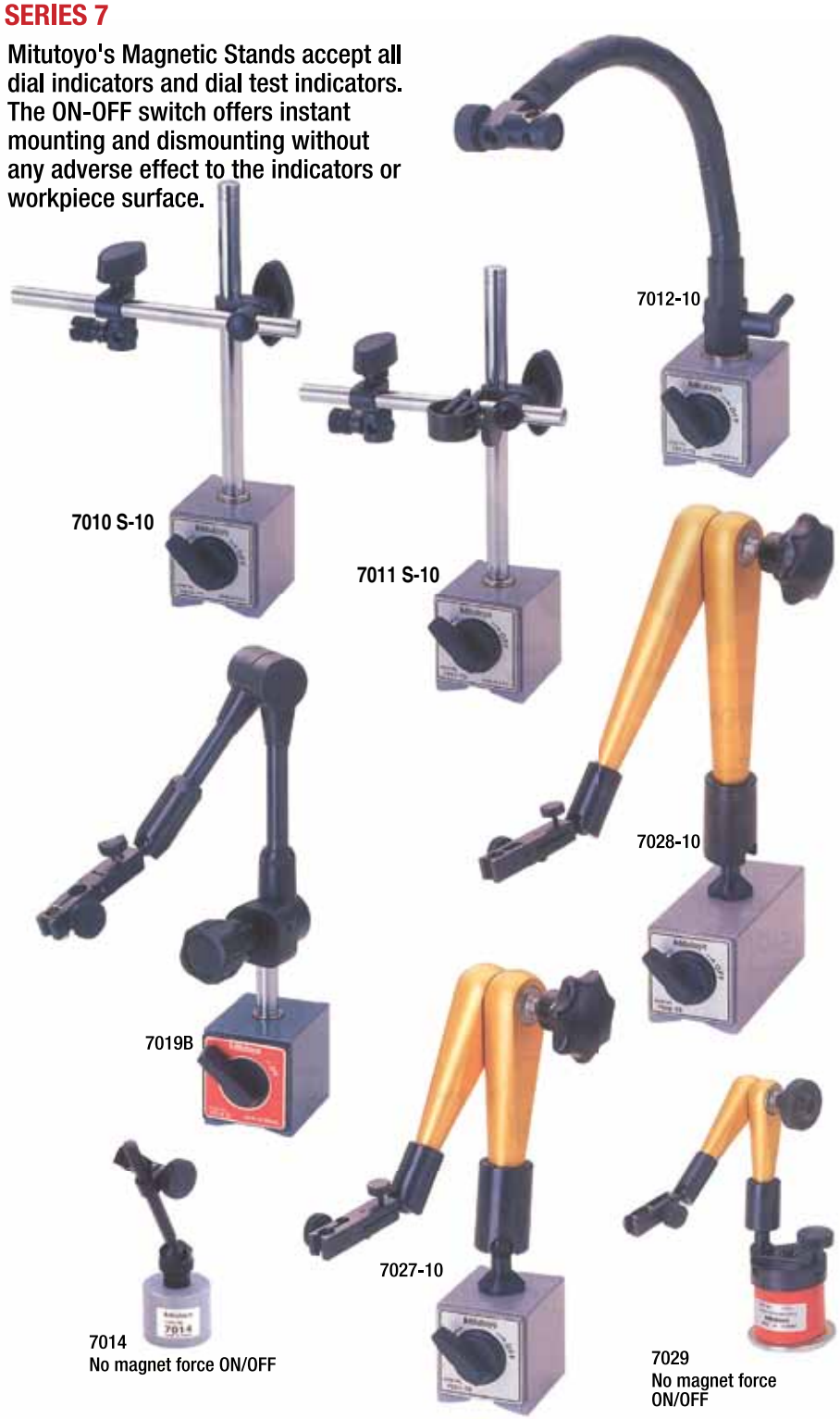

DIMENSION

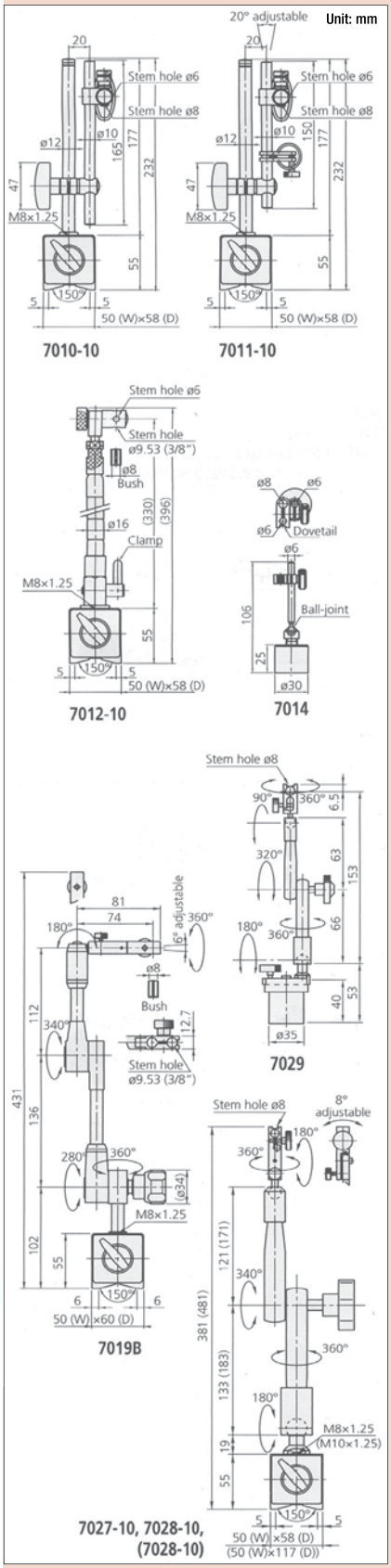

SPECIFICATIONS

Order No.	Description	Applicable holding stem dia.	Dovetail groove	Remarks
7010S-10	Magnetic stand	ø6mm, ø8mm	—	—
7011S-10	Magnetic stand	ø6mm, ø8mm	—	With fine adjustment
7012-10	Magnetic flexi-stand	ø6mm, ø8mm, ø9.53mm (3/8")	—	For dial test indicator
7014	Mini magnetic stand	ø6mm, ø8mm	Provided	Without magnet ON/OFF
7019B	Universal magnetic stand	ø8mm, ø9.53mm (3/8")	Provided	With hydraulic position lock
7027-10	Universal magnetic stand	ø8mm	Provided	With hydraulic position lock
7028-10	Universal magnetic stand	ø8mm	Provided	With hydraulic position lock
7029	Universal magnetic stand	ø8mm	Provided	Without magnet ON/OFF

Mitutoyo

Dial Gage Stand

SERIES 7

The Dial Gage Stands are designed for comparison measurements of height using a dial indicator or Digimatic Indicator.

DIMENSION

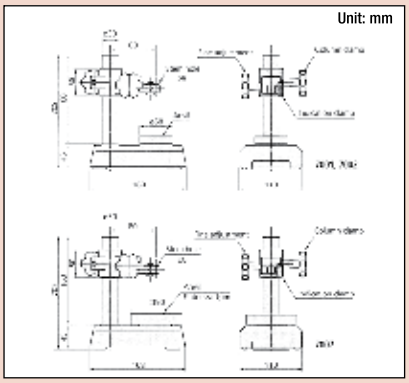

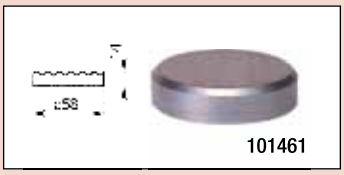

101461

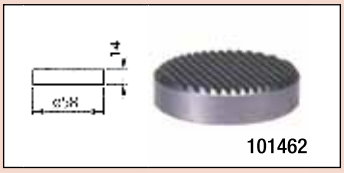

101462

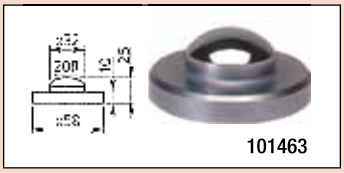

101463

SPECIFICATIONS

Metric

Order No.	Stem hole	Remarks
7001	ø8mm	with serrated anvil
7002	ø8mm	with flat anvil
7007	ø8mm	with square anvil

FEATURES

- Vertical travel of the gage holder — Dial Gage Stand: 100mm, Transfer Stand: 335mm
- Fine-adjustment of 1mm available for zero-setting of the indicator.
- With an interchangeable anvil. Domed anvil (101463) is optional.

Optional Accessory

101462: Hardened steel serrated anvil (flatness: 1μm)*
101463: Hardened steel domed anvil*
101461: Hardened steel flat anvil (flatness: 1μm)*
*Not available for 7007

7001
with ø58mm serrated anvil

7002
with ø58mm flat anvil

7007
90mm square anvil

Transfer Stand

SERIES 519

The Transfer Stands are designed for comparison measurements of height using a dial indicator or Digimatic Indicator.

519-109M
with ø58mm serrated anvil

FEATURES

- Vertical travel of the gage holder — Dial Gage Stand: 100mm, Transfer Stand: 335mm
- Fine-adjustment of 1mm available for zero-setting of the indicator.
- With an interchangeable anvil. Domed anvil (101463) is optional.

DIMENSION

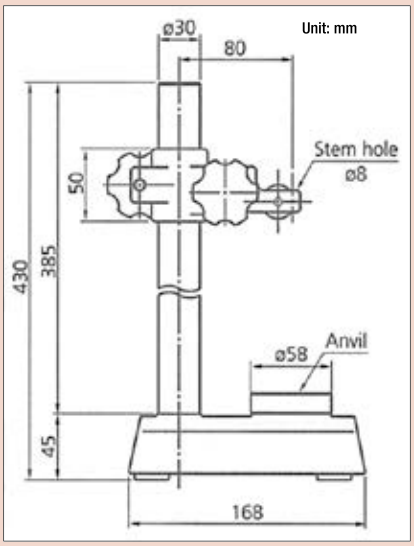

SPECIFICATIONS

Metric

Order No.	Stem hole	Remarks
519-109M	ø8mm	with serrated anvil

Inch

Order No.	Stem hole	Remarks
519-109E	3/8" DIA	with serrated anvil

Granite Comparator Stand

SERIES 215

Mitutoyo's Granite Comparator Stands are basic building-blocks for the assembly of special-purpose, precision measuring equipment. By mounting precision measuring instruments such as Digimatic indicators, Mu-Checker Cartridge Heads, and Linear Gages onto the stands, it is possible to satisfy all manner of measuring assignment. The rigid granite base is free from burrs, pileups, rust, and deterioration over time.

215-153

215-154

SPECIFICATIONS

Order No.	Granite base size (W x D x H)	Column travel	Stem hole	Remarks
215-151	150 x 200 x 50mm	260mm	ø8mm	With fine adjustment of 1mm range
215-153	200 x 250 x 80mm	250mm	ø8mm	With fine adjustment of 1mm range
215-154	300 x 250 x 80mm	300mm	ø8mm	With fine adjustment of 1mm range
215-156	300 x 250 x 80mm	300mm	ø8mm, ø20mm	With fine adjustment over the entire travel

Optional Accessory

58AAA151: ø8mm bush*
58AAA273: ø9.53mm (3/8") bush*
58AAA276: ø15mm bush*
*Only available for 215-156.

DIMENSION

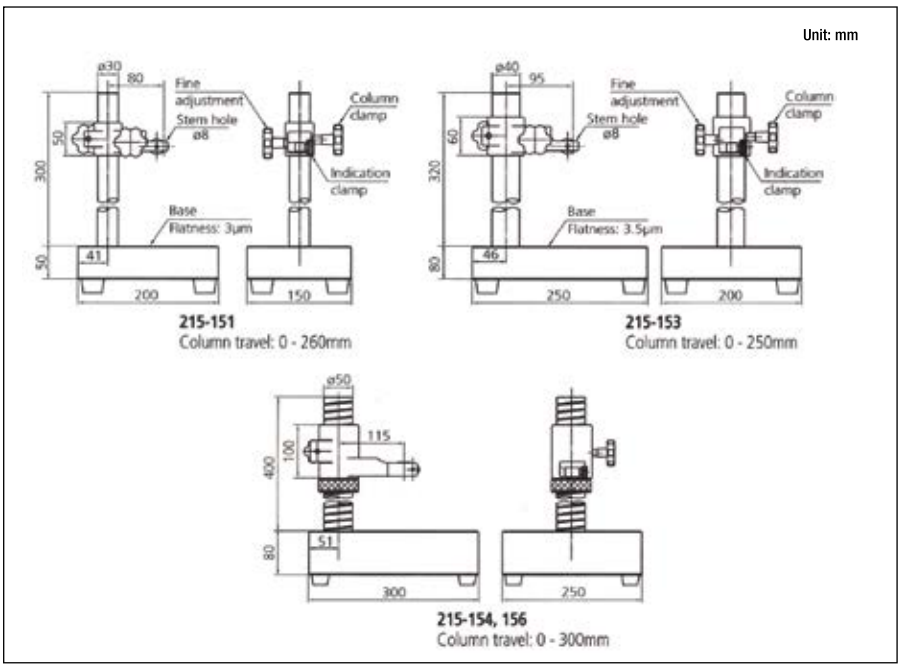

Mitutoyo

Comparator Stand

SERIES 215

The Comparator Stands consists of a very stable, cast-iron base and an upright column with a mounting bracket that features fine adjustment. The grid type anvil prevents the workpiece from sticking to it.

Optional Accessory

58AAA151: ø8mm bush*
58AAA273: ø9.53mm (3/8") bush*
58AAA276: ø15mm bush*
*Only available for 215-505.

215-504

215-405

SPECIFICATIONS

Order No.	Square anvil size (W x D)	Column travel	Stem hole	Remarks
215-405	110 x 110mm	200mm	ø8mm	With fine adjustment of 1mm range
215-504	150 x 150mm	250mm	ø8mm	With fine adjustment over the entire travel
215-505	150 x 150mm	250mm	ø8mm, ø20mm	With fine adjustment over the entire travel
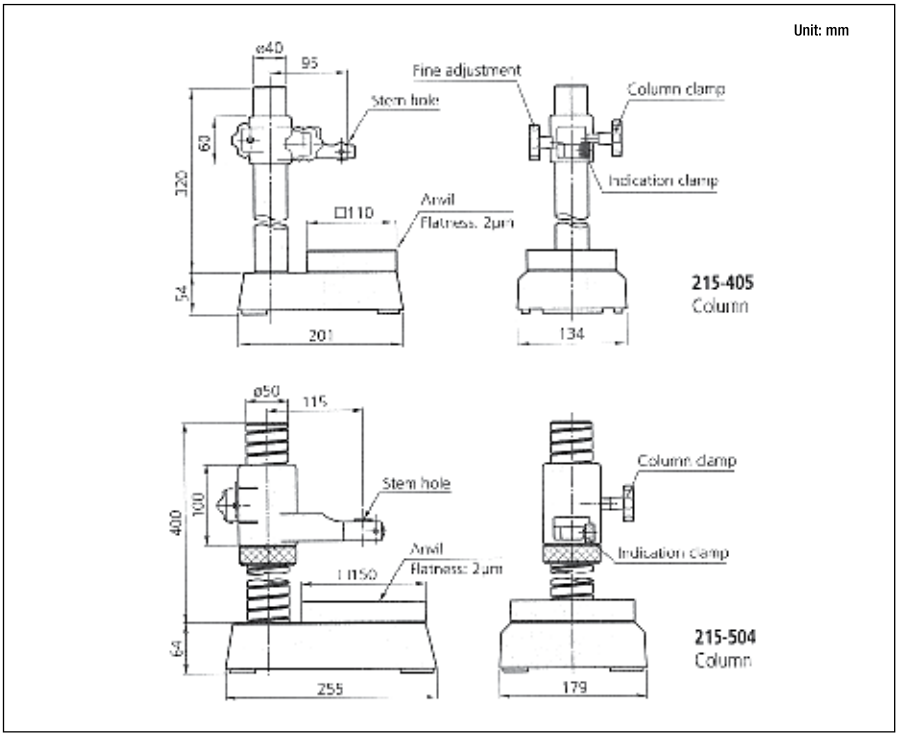
DIMENSION